TITAN IMPLEMENT

HAY SPEARS

Our Hay Spear is an excellent piece of equipment to have on the farm. Easily move bales of hay with a quick hook up on your skid steer or tractor. The Economy Hay Spear is rated at 2,800 lbs, while the rest are rated at 3500 lbs. Euro Style and John Deere mounts are available.

- 3,500 lb weight rating
- Euro style and John Deere mounts are available
- Spear length 48" overall

Single Hay Spear

Double Hay Spear

Triple Hay Spear

Quadruple Hay Spear

Economy Hay Spear
(Frame shown without main or stabilizing spears)
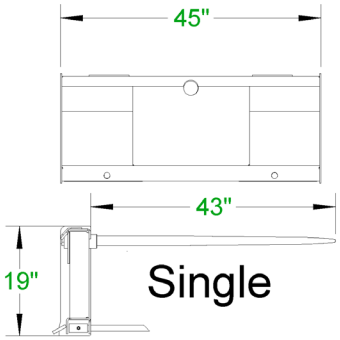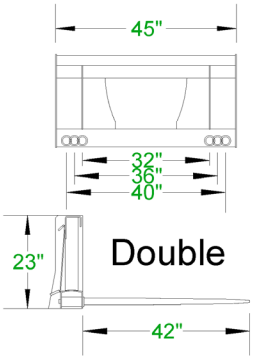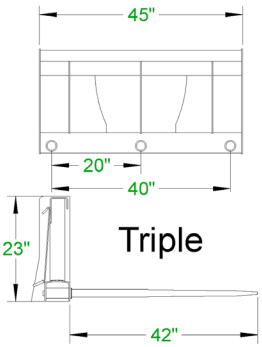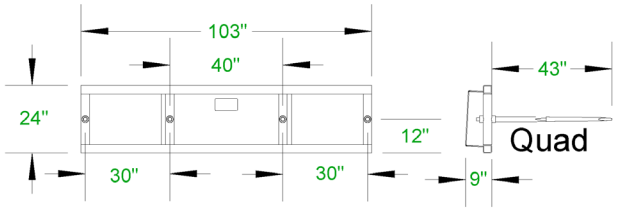
Hay Spear Specs