ROTARY TILLERS
VH90 Series

TITAN IMPLEMENT

OPERATOR'S
AND
PARTS MANUAL

Congratulation for purchasing your new TITAN IMPLEMENT rotary tiller!

This tiller has been designed and manufactured following all safety and quality requirements needed for a safe and satisfactory use over time.

A careful reading of this manual will permit you to familiarize with your new equipment, and will provide you all the tools needed to use it safely.

A proper maintenance and knowledge of the safety rules of use will allow to obtain the best performance and a long service life of the machine.

The Safety Alert Symbol used throughout this manual and on safety decals of the machine indicates the presence of potential hazard to the operator. When you see this symbol, be alert and carefully read the message that follows it.

The Safety Alert Symbol is used in conjunction with following Signal Words, according to the degree of possible injuries that may result operating the implement:

DANGER
Indicates an imminently hazardous situation that, if not avoided, will result in death or serious injury.

WARNING
Indicates a potentially hazardous situation that, if not avoided, could result in death or serious injury, and includes hazards that are exposed when guards are removed. It may also be used to alert against unsafe practices.

CAUTION
Indicates a potentially hazardous situation that, if not avoided, may result in minor or moderate injury. It may also be used to alert against unsafe practices.

IMPORTANT
Indicates instructions or procedures that, if not observed, can cause damage to equipment or environment.

NOTE
Indicates helpful information.

READ, UNDERSTAND, and FOLLOW the safety messages following the Safety Alert Symbol and Signal Words. Failure to comply with safety messages could result in serious bodily injury or death.

TO THE PURCHASER

This manual contains valuable information about TITAN IMPLEMENT ROTARY TILLER. It has been carefully prepared to give you helpful suggestions for operating, adjusting, servicing repair parts.

Keep this manual in a convenient place for quick and easy reference. Study it carefully. You have purchased a dependable and sturdy tiller, but only by proper care and operation can you expect to get the service and long life designed and built into it.

RIGHT-HAND AND LEFT-HAND sides are determined by watching from the tractor side.

Sometime in the future your tiller may need new parts to replace those are worn or broken. If so, go to nearest TITAN IMPLEMENT dealer and provide him the model and part number.

Customer information

Name _____

Purchased from_____

Purchased date_____

Model No._____

Serial No._____

TABLE OF CONTENTS

Contents

1. ABOUT THIS MANUAL 1

2. INTRODUCTION 1

2.1. TILLER IDENTIFICATION 1

2.2. INTENDED USE 2

2.3. MAIN PARTS DESCRIPTION 3

2.4. ILLER SPECIFICATIONS 4

3. SAFETY 5

3.1. GENERAL SAFETY INSTRUCTION 5

3.2. EQUIPMENT SAFETY INSTRUCTIONS 6

3.3. OPERATING SAFETY INSTRUCTIONS 7

3.4. TRANSPORTING SAFETY INSTRUCTIONS 8

3.5. MAINTENANCE SAFETY INSTRUCTIONS 9

3.6. STORAGE SAFETY INSTRUCTIONS 9

3.7. SAFETY LABELS 10

SAFETY LABELS POSITION AND DESCRIPTION 10

4. SET UP 14

4.1. LOWER HITCHES POSITIONING 14

4.2. CONNECTING TO THE TRACTOR 15

4.3. DRIVELINE INSTALLATION 15

DRIVELINE LENGTH CHECK 16

4.4. TRACTOR-TILLER STABILITY 17

5. OPERATING 18

5.1. START UP 18

5.2. OPERATING INSTRUCTIONS 19

5.3. ADJUSTMENTS 20

LOWER CLEVISES ADJUSTMENT 20

FRICTION CLUTCH ADJUSTMENT 20

SKIDS ADJUSTMENT 21

REAR BOARD ADJUSTMENT 22

GEAR BOX SPEED ADJUSTMENT 23

5.4. STOPPING AND DISCONNECTION 24

5.5. TRASPORTING 25

6. MAINTENANCE.....25
6.1. BLADES REPLACEMENT 25
6.2. GEARBOX LUBRICATION 26
6.3. SIDE CASE LUBRICATION..... 27
6.4. BEARING HOUSING LUBRICATION 28
6.5. DRIVESHAFT MAINTENANCE..... 29
7. STORAGE.....30
8. SCRAPPING.....30
9. TROUBLESHOOTING.....31
10. TORQUE VALUES TABLE.....33
11. WARRANTY 33
12. SPARE PARTS 35

1. ABOUT THIS MANUAL

The operator must read the manual for a correct understanding of the hazards that may present when operating the tiller, as well as for obtain optimum performance from the machine.

The manual is part of the machine, it must be kept in good condition and remain with the machine even in case of resale, until its demolition. In case of loss or damage, request a new copy to the Manufacturer or your Dealer.

The information, descriptions and illustrations in this manual describes the state of the product at the time of its publication, and may not reflect the product in the future.

The Manufacturer reserve the right to make design improvements or changes in specifications without incurring in any obligation to install them on units previously sold.

Text, illustrations and drawings of this manual cannot be disclosed or transmitted, in whole or in part, to third parties without the written permission of the Manufacturer. All rights are reserved.

2. INTRODUCTION

2.1. TILLER IDENTIFICATION

Each tiller is provided with a plate for unique identification (see position in picture below), showing the CE marking together with following information:

- Manufacturer name and address
- Type of machine ("TYPE")
- Model of machine ("MODEL")
- Serial number ("SERIAL No.")
- Construction year ("YEAR")
- Machine weight ("MASS")
- Speed required at Implement Input Connection ("INPUT").

It's recommended to note down all data shown on the plate:

Any request for assistance or information regarding the machine must be directed to the Manufacturer or Dealer always referring to the model and serial number as shown on the plate affixed to the machine.

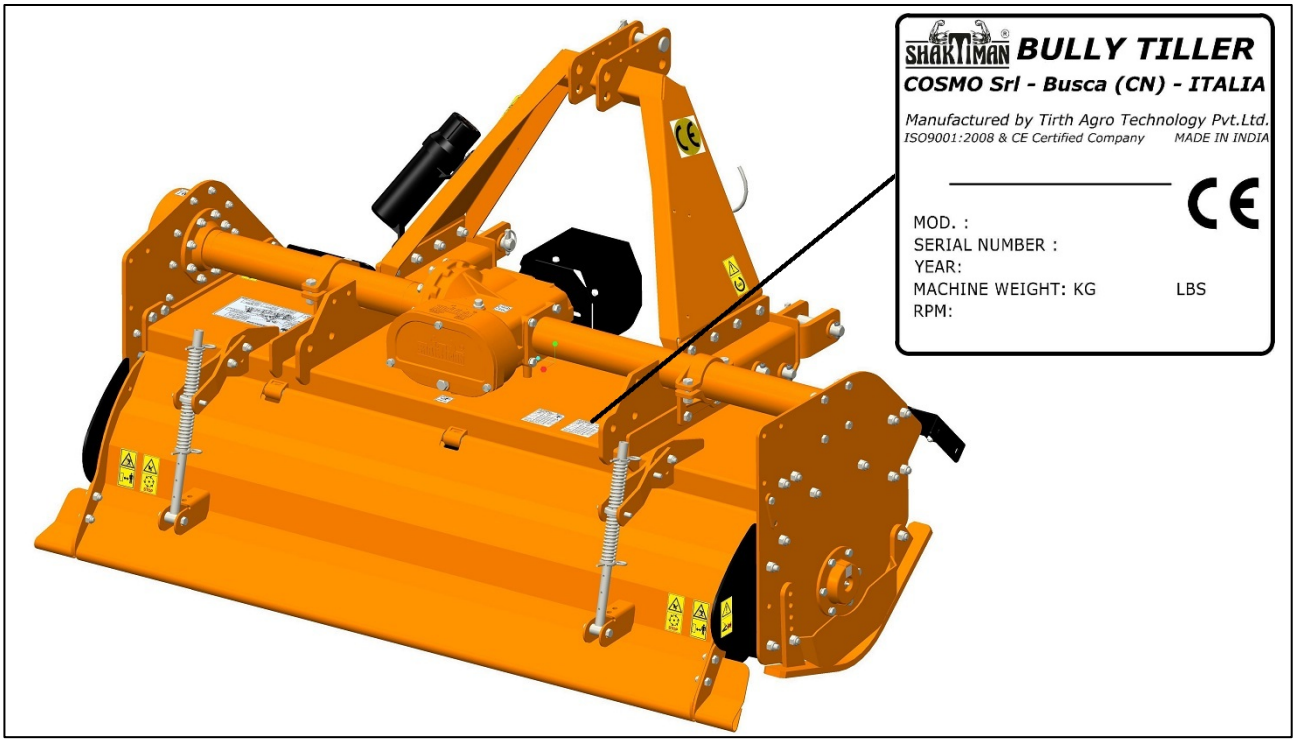

2.2. INTENDED USE

The TITAN IMPLEMENT VH90-series tillers are designed specifically for soil tilling, and are intended to be used for preparing the seed bed - directly or after plowing -, for shuffling stubble and crop residues, perform mechanical weeding and break permanent pastures.
The tillers can be set up in different configuration, depending of the type of work required, through the assembly of optional kits, and are compatible for the fitting with complementary machines (i.e. spreaders, seeding machines).

They are designed to be mounted on tractors equipped with hydraulic lift and universal three point hitch that can support the implement weight, and driven by the power of the tractor through the PTO driveshaft.

The tractors used to operate the VH90 series tillers must have the following requirements:

Hitch Category:	3-point Cat. II standard
PTO:	540 RPM, 6-spline, 1 3/8 Z6
Horsepower:	As per given in Technical Specification Sheet

⚠ DANGER
Any use of the machine other than the intended use is non-intended use, and is to be considered as unauthorized and dangerous. The manufacturer assumes no liability for damage resulting from non-intended use.

2.3. MAIN PARTS DESCRIPTION

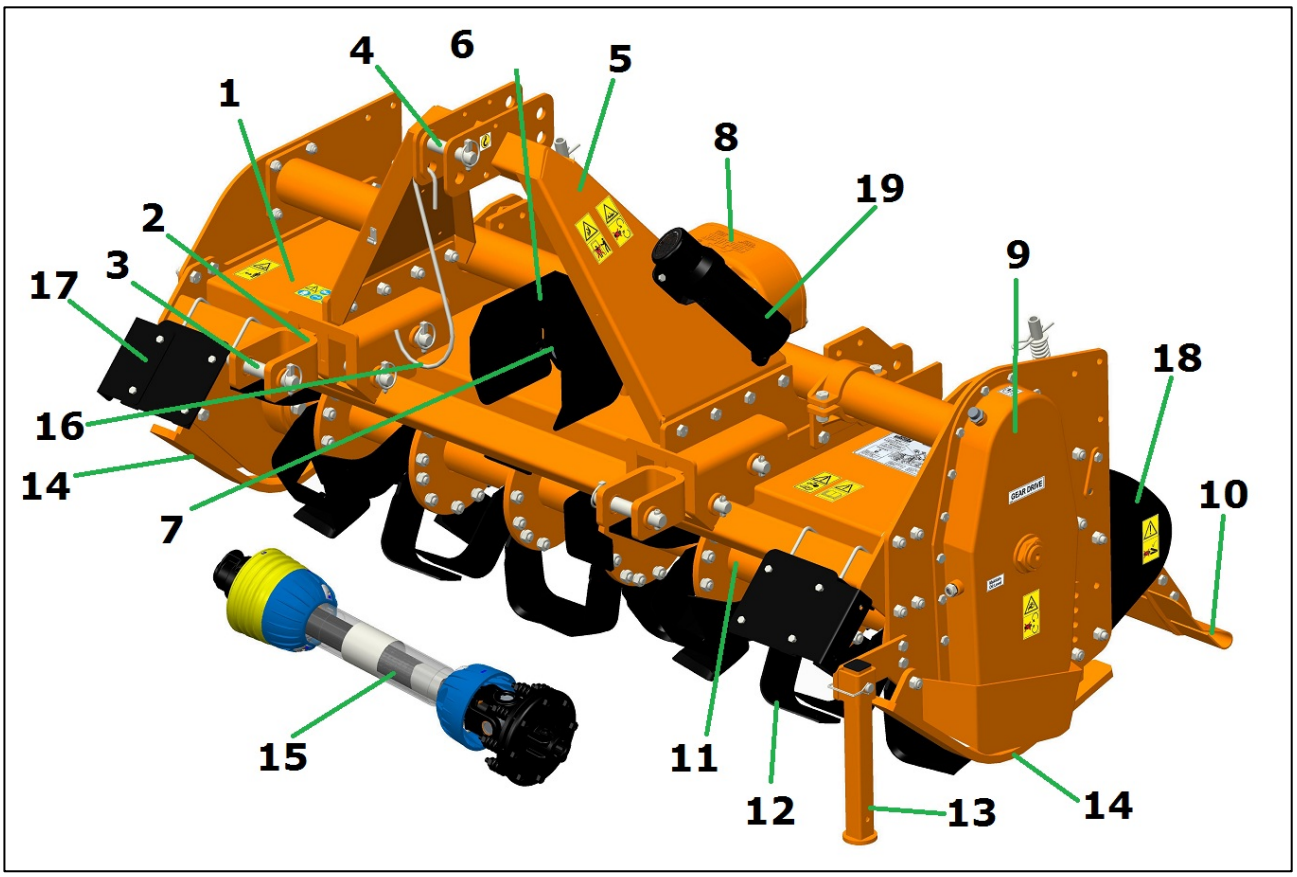

1. Tiller deck
2. Clevis (lower hitch)
3. Lower hitch pin
4. Upper hitch pin
5. 3-point brackets
6. PTO shield
7. Implement Input Connection
8. Gearbox
9. Side transmission case
10. Rear leveling board
11. Rotor shaft
12. Tines
13. Parking stand
14. Skids
15. Cardan driveshaft
16. Driveshaft support
17. Front barriers
18. Rear guards
19. Container for Manual

NOTE

To make the illustrations more clear, some images of this manual may refer to machines lacking of some components (e.g. safety devices and barriers).

Unless otherwise indicated, images shown in this manual refer to the tiller 1.75m.

2.4. TILLER SPECIFICATIONS

		VH90 SERIES TILLER MODEL
		VH90
Overall dimensions	mm	2425 x 1263 x 1085
Tilling width	mm	2260
	in	89"
Recommended Tractor HP range	HP	80-95
3-point Hitch type		Cat. II, compat. Quick Hitch II cat. ASAE
Frame off-set	in	0.17"
No. of Tines (L/C-80x7)	No.	54
PTO Input speed	rpm	540
Rotor Shaft Speed	rpm @540	214
Standard Tine Construction	-	Curved / Square
Transmission type	-	Gear
Max Working depth	in	9"
Rotor tube diameter	mm	89
Rotor Swing Diameter	mm	521
Driveline safety device	-	Slip clutch / Shear Bolt
Weight (driveline excluded)	Kg	706
	lbs	1557

3. SAFETY

Proper use of equipment, a strict observance of the safety messages listed below and application of all reasonable practices to avoid any risks, prevents accidents or injury, allows the machine working better and longer, and minimize the failures.

The manufacturer assumes no liability for any damage resulting from not applying the behavioral rules indicated into the manual.

3.1. GENERAL SAFETY INSTRUCTION

⚠ DANGER

The machine must be used only by authorized and well trained operators. The operator must have read and understood the instructions of this manual, it must make adequate preparation for the proper use of the machine and must hold a driving license. In case of doubt about the use of the machine and/or the interpretation of this manual, the operator must contact the Manufacturer or the Dealer.

⚠ WARNING

The manual must always remain with the machine. In case of loss or damage, request a new copy to the Manufacturer or your Dealer.

⚠ WARNING

Follow strictly the rules prescribed by the safety pictograms applied to the machine.

⚠ WARNING

Be sure that all safety pictograms are legible. If pictograms are worn, they must be replaced with others obtained from the Manufacturer, and placed in the position indicated by this manual.

⚠ DANGER

Before using the machine, make sure that all safety devices are installed and in good working conditions. In case of damages of shields, replace them immediately.

⚠ DANGER

Is absolutely forbidden to remove or alter safety devices.

⚠ DANGER

Before starting, and during operation of the tiller, make sure there are no people or animals in the operation area: the machine can project material from the back, with risks of serious injury or death.

⚠ DANGER

Pay maximum attention to avoid any accidental contact with rotating parts of the machine.

⚠ DANGER

During operation, adjustment, maintenance, repairing or transportation of the machine, the operator must always use appropriate Personal Protective Equipment (PPE).

⚠ DANGER

Do not operate the implement while wearing loose fitting clothing that can give rise to entanglement in parts of the machine.

⚠ DANGER
Do not operate the implement when tired, not in good condition or under the influence of alcohol or drugs.

⚠ CAUTION
If the use of the machine is required at night or in conditions of reduced visibility, use the lighting system of the tractor and possibly an auxiliary lighting system.

3.2. EQUIPMENT SAFETY INSTRUCTIONS

⚠ WARNING
Use the tiller for its intended purpose only. Improper use can damage the tiller and cause serious injury to persons, animals, or death.

⚠ DANGER
The machine should be used by a single operator driving the tractor.

⚠ WARNING
Any unauthorized modification of the machine may cause problems in safety and relieves the Manufacturer from any liability for damages or injuries that may result to operators, third parties and objects.

⚠ WARNING
Before using the machine, familiarize yourself with its controls and its working capacity.

⚠ WARNING
Do not leave the tiller unattended with tractor engine running.

⚠ WARNING
Do not operate tiller on too muddy, sandy or rocky soils.

⚠ WARNING
Keep the machine clean from debris and foreign objects which may damage functioning or cause injury.

⚠ WARNING
Do not use the machine if the category of the connecting pins of the tiller does not match that of the tractor hitch system.

⚠ WARNING
Do not use the machine with missing bolts, screws, pins or safety pins.

⚠ WARNING
Never use the machine to transport or lift people, animals or objects.

⚠ WARNING
Make certain, by adding front ballast, that at least 20% of the total weight (tractor, implement and ballast) is on the front axle of the tractor, to ensure stability.

⚠ WARNING
Before engaging the tractor PTO, make sure the tractor PTO speed is set as required for the tiller (540 rpm). Do not over speed PTO or machine breakage may result.

⚠ DANGER
Do not operate the tiller if the driveshaft is damaged. The driveshaft could be subject to breakage during operation, causing serious injury or death. Remove the driveshaft and replace it with an undamaged.

3.3. OPERATING SAFETY INSTRUCTIONS

⚠ WARNING
Before using the machine, be sure to have cleared the operating area from obstacles (stones, branches, debris, etc...). Mark all the obstacles that cannot be eliminated (e.g. by means flags).

⚠ DANGER
Never engage the tractor PTO in the presence of people close to the driveshaft. The body, hair or clothing of a person can get caught in rotating parts, causing serious injury or death.

⚠ DANGER
Before engaging the PTO and during all operations, make sure that no person or animal is in immediate area of action of the machine. Never use the tiller if people are in his working area.

⚠ DANGER
It's absolutely forbidden to stand near the tiller with moving parts.

⚠ WARNING
The operator must operate tiller lifting/lowering only from the driving seat of the tractor. Do not perform lifting maneuvers on side or behind the tractor.

⚠ WARNING
Before making changes in direction, turns or going in reverse, slightly lift the tiller from the ground after disengaging the power take-off, to avoid damage to the machine.

⚠ DANGER
In presence of steep slopes (greater than 15 degrees) the tilling action may cause instability of the tractor, with risk of tipping and consequent serious injury or death hazard. Consult the manual for the tractor to determine the maximum slope that the tractor is able to deal with.

⚠ DANGER
Always disengage the PTO before raising the tiller, and never engage the PTO with the tiller in the raised position. The machine might throw objects at high speed, causing serious injury or death.

⚠ WARNING
Never leave the driver's seat when the tractor is turned on. Before leaving the tractor, lower the tiller to the ground, disengage the PTO, insert the parking brake, stop engine and remove the key from the control panel.

⚠ DANGER
The PTO shields of tractor and implement side, the driveshaft shielding and the driveshaft retaining chains must be properly installed and in good condition, to avoid risk of entanglement with serious injury or death.

⚠ DANGER
Before engaging the PTO of the tractor, always make sure that the drive shaft is mounted in the correct direction, and that its clamping elements are properly connected both to tractor side and to tiller side.

⚠ WARNING
Stop operating immediately if blades strike a foreign object. Repair all damage and make certain rotor and blades are in good condition before resuming operation.

⚠ WARNING
Always disengage the tractor PTO when the driveshaft exceed an angle of 10 degrees up or down while operating. An excessive angle with driveshaft rotating can break the driveshaft and cause flying projectiles.

⚠ CAUTION
Avoid clutch's overheating caused by too long or frequent slipping of the clutch, since it can damage the clutch components. Before checking slip clutch, make sure it has cooled. Clutch could be extremely hot and cause severe burn.

⚠ CAUTION
Prolonged use of the tiller can cause overheating of the gearbox. Do not touch the gearbox during use and immediately after, it could be extremely hot and cause severe burn.

⚠ WARNING
All adjustment operations on the tiller must be performed by qualified and trained operators, with the tractor engine off, the PTO disengaged, the tiller lowered to the ground or on security stands, the ignition key off and the parking brake set.

3.4. TRANSPORTING SAFETY INSTRUCTIONS

⚠ WARNING
Before transporting, determine the stopping characteristics of the tractor and implement.

⚠ WARNING
Transport only at speeds where you can maintain control of the equipment.

⚠ WARNING
When driving on roads, the implement must be in transport position adequately raised from the road surface, with tractor lifting hydraulics locked so that the tiller cannot be lowered accidentally.

⚠ DANGER
The implement may be wider than the tractor. Pay attention during transporting to persons, animals or obstacles exposed.

⚠ WARNING
When turning, use extreme care and reduce tractor speed.

⚠ WARNING
Do not operate the tractor with weak or faulty brakes or worn tires.

⚠ CAUTION
Always use tractor lighting system and auxiliary lighting system for an adequate warning to operators of other vehicles, especially when transporting at night or in conditions of reduced visibility.

⚠ DANGER
In case of tiller lifting, make sure that the lifting device chosen is suitable to perform the operation safely, and use only the lifting points prescribed on tiller.

3.5. MAINTENANCE SAFETY INSTRUCTIONS

⚠ WARNING
All maintenance and repairing operations must be performed by qualified and trained operators, with the tractor engine off, the PTO disengaged, the tiller lowered to the ground or on security stands, the ignition key off and the parking brake set.

⚠ WARNING
Perform repairs and replacements necessary to the machine using only original spare parts provided by the manufacturer or your dealer.

⚠ DANGER
Perform maintenance operations always using appropriate Personal Protective Equipment (protective eye glasses, hard hat, hearing protection, safety shoes, overall and work gloves, filter mask).

⚠ CAUTION
Before any maintenance operation, make sure that the parts which may become hot during use (friction clutch, gear box...) have cooled.

⚠ WARNING
Do not perform repairs that you do not know. Always follow the manual instructions and in case of doubt contact the Manufacturer or your dealer.

⚠ DANGER
Do not swallow fuels or lubricants. In case of accidental contact with eyes, rinse well with water and consult a doctor.

3.6. STORAGE SAFETY INSTRUCTIONS

⚠ WARNING
Never leave the tractor unattended with the tiller in lifted position. Accidental operation of lifting lever or a hydraulic failure may cause sudden drop of unit with injury or death by crushing.

⚠ DANGER

Following operation, or before unhooking the tiller, stop the tractor, set the brakes, disengage the PTO, lower the attached tiller to the ground, shut off the engine, remove the ignition key and wait for all moving parts to stop.

⚠ WARNING

Make sure all parked machines are on a hard, level surface and engage all safety devices.

⚠ CAUTION

Place support blocks under tiller as needed to prevent unit from tipping over onto a child and/or an adult. A tiller that tips over can result in injury or death.

⚠ CAUTION

Store the unit in an area away from human activity.

3.7. SAFETY LABELS

The safety labels applied on the machine give fundamental information for using the machine safely.

Make sure safety labels are in good conditions. If pictograms are worn, they must be replaced with others obtained from the manufacturer and placed in the position indicated by this manual.

Make sure the safety labels are legible. If necessary, wipe them by a cloth, with soap and water.

SAFETY LABELS POSITION AND DESCRIPTION

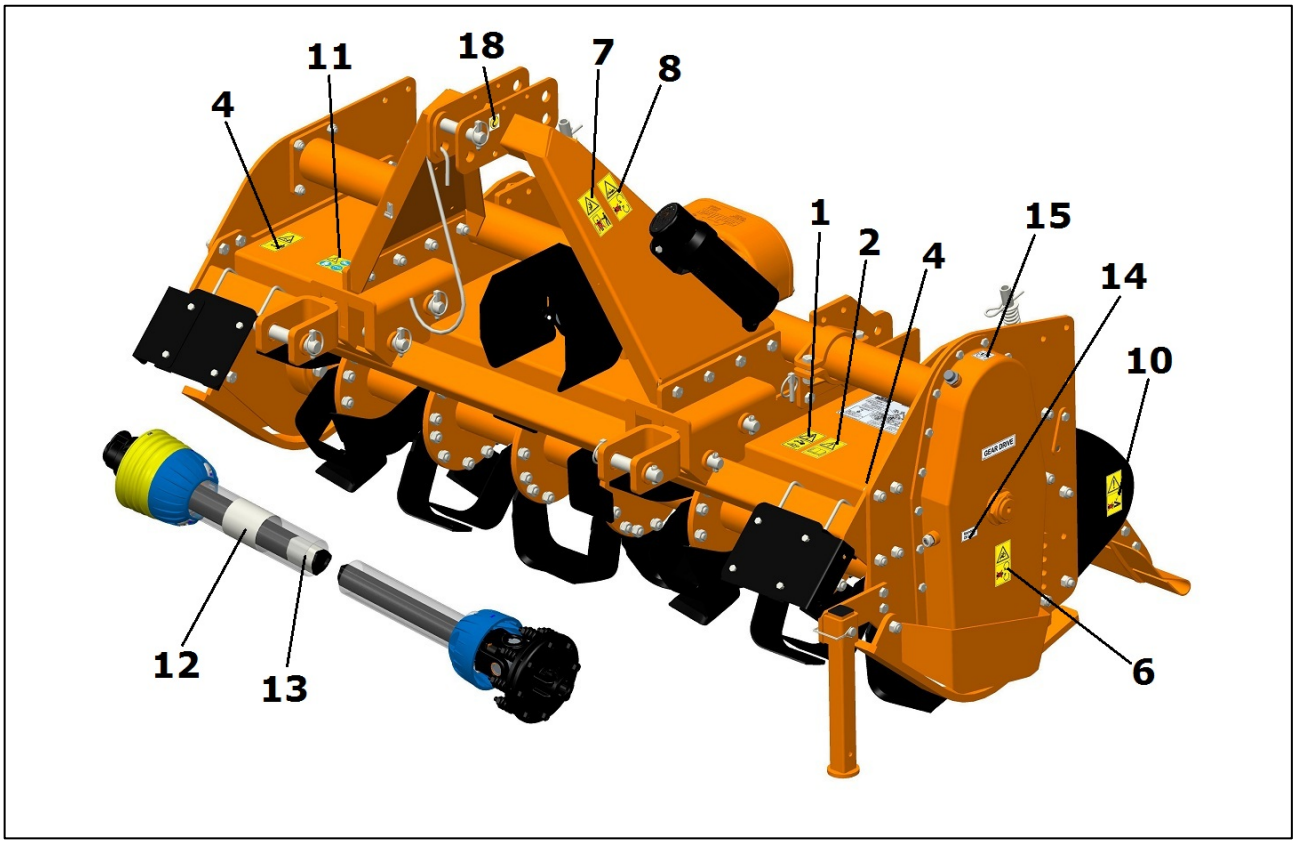

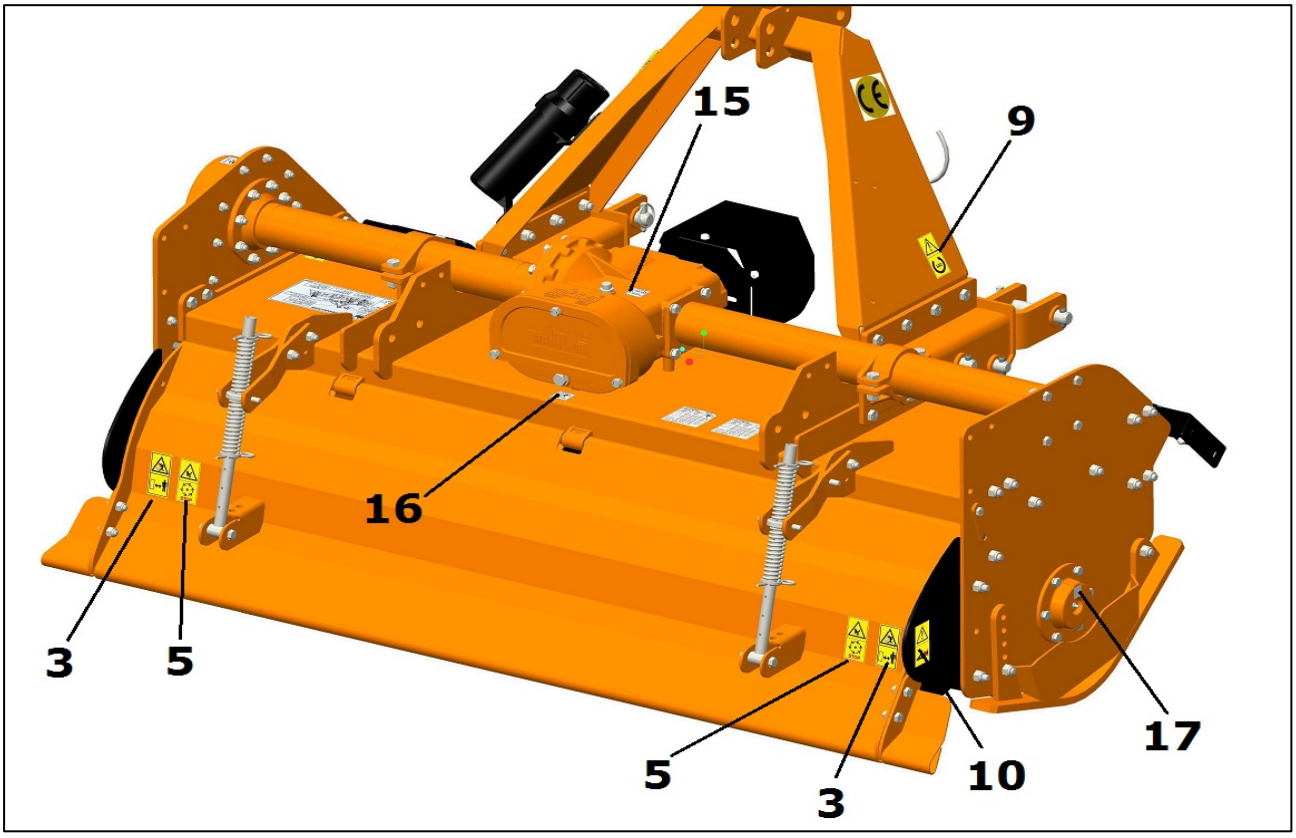

1	D1090		Carefully read the operator's manuals of tiller, tractor and cardan shaft before using the machine.
2	D1038		Disengage the PTO, turn off the tractor engine, remove the key and ensure that all rotating parts have stopped before approaching the implement. Read the operator's manual before performing any maintenance operation.
3	D1095		Thrown or flying objects hazard. Keep a safe distance from the machine.

4	D1096		Rotating knives: severing of lower limbs hazard. Keep a safe distance from the machine.
5	D1078		Cutting of fingers or hand hazard. Wait until all machine components have completely stopped before touching them.
6	D1079		Rotating gears: fingers or hand entanglement hazard. Do not open or remove safety shields while engine is running.
7	D1097		Crushing hazard. Stay clear of draft link lifting range while in operation.
8	D1098		Implement input driveline: body entanglement hazard. Do not open or remove safety shields while engine is running.
9	D1099		Before engaging the tractor PTO, check that rpm rate and sense of rotation are those prescribed for the implement.

10	D1122		Fingers/hands crushing hazard. Keep hands at safe distance from the machine.
11	D1082		Always wear protective clothing and equipment appropriate for the job: hearing protection, safety shoes, safety gloves, safety glasses and overall.
12	D1123		Rotating driveline: body entanglement hazard. Keep away. Do not wear loose clothing, jewelry, or hair that could become entangled with the driveline. Do not operate without driveline, tractor and all safety shields in place. Keep all bystanders away from the implement while in operation. Read the operator's manuals of driveline, tractor and implement before using the machine.
13	D1124		Rotating driveline: body entanglement hazard. Keep away. Do not wear loose clothing, jewelry, or hair that could become entangled with the driveline. Do not operate without driveline, tractor and all safety shields in place. Damaged or missing parts must be repaired or replaced before using the driveline. Disengage the PTO, turn off the tractor engine, remove the key and ensure that all rotating parts have stopped before approaching the implement. Read the operator's manuals of driveline, tractor and implement before using the machine.
14	D1006		Oil Level
15	D1007		Oil filling point

16	D1009		Drain Plug
17	D1008		Greasing point
18	D1083		Lifting point

4. SET UP

The tiller is delivered fully assembled and equipped with a driveshaft with torque limiter (clutch discs / Shear Bolt) and related operating manual.

When the machine is delivered, check that there is no damage to the tiller or driveshaft. In case of damage or missing parts immediately notify the manufacturer or your dealer.

4.1. LOWER HITCHES POSITIONING

The VH90 series tillers are designed to be mounted on tractors equipped with:

- 3-point Hitch Category II (ISO 730 standard);
- Quick Hitch Category II (ASABE Standard).

The position of the lower hitches must be adjusted accordingly.

If the tractor is equipped with a 3-point Hitch Category II (ISO 730 standard), verify that the lower clevises show the pins oriented down (see figure), so that the distance between upper and the lower pins is 24" (610 mm approx), as required from the standard.

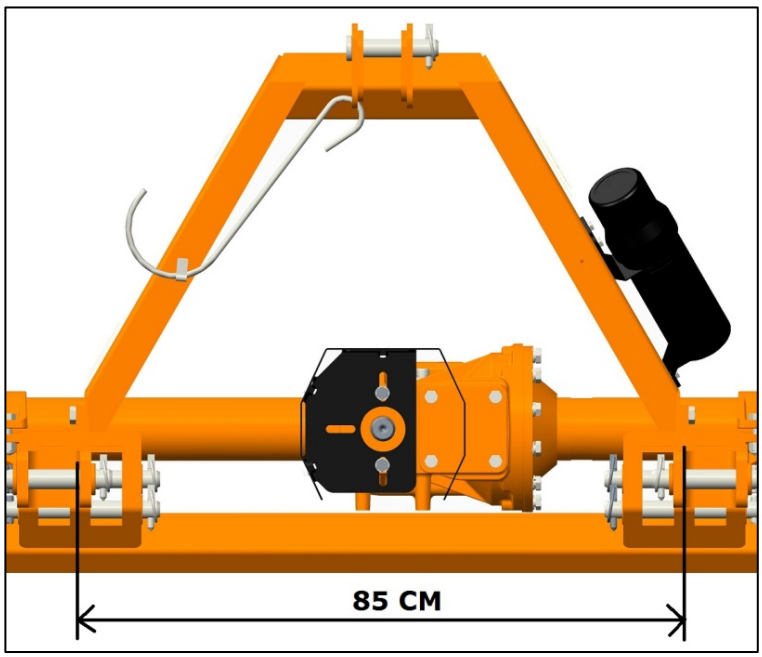

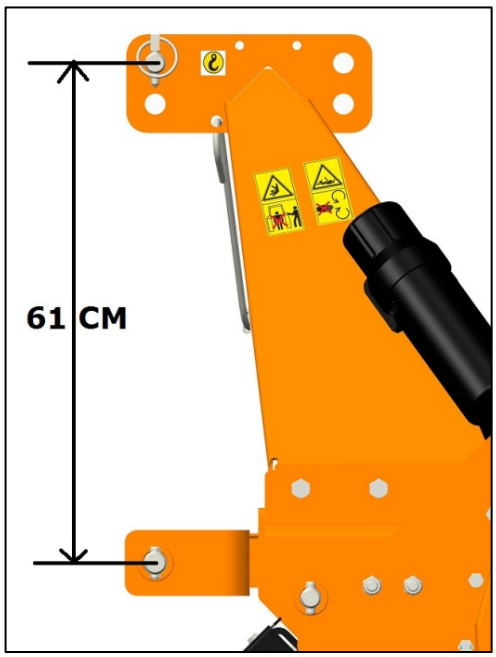

4.2. CONNECTING TO THE TRACTOR

To connect the tiller to the tractor the operator must do the following:

- Drive the tractor in reverse, up to align the rear lifting arms to lower hitches of the tiller in parking;

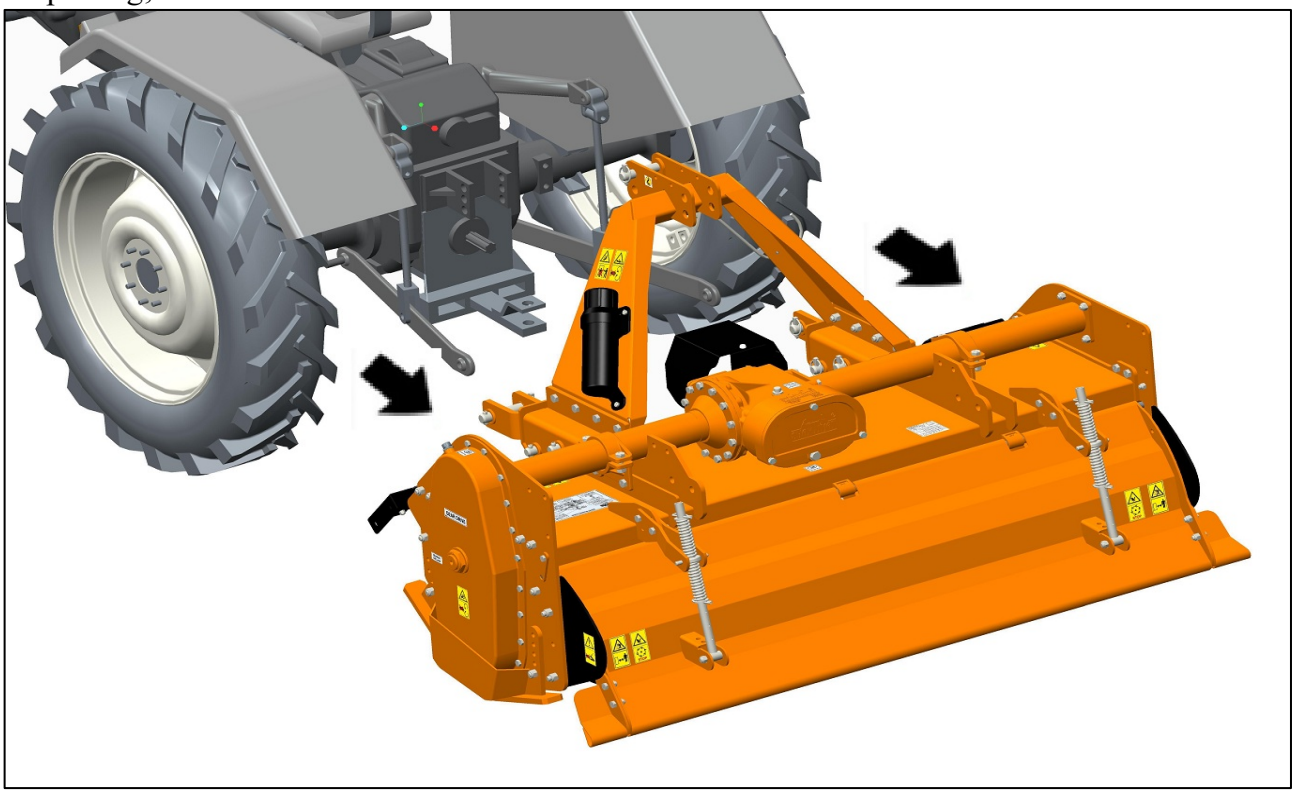

- Set the tractor's parking brake, stop engine, remove the ignition key and get off the tractor;
- Connect the lifting arms of the tractor to the lower hitches of the tiller, and the 3-point top link to the upper hitch of the tiller, through the use of the pins and the relative safety split pins;
- Raise the tiller until PTOs of tractor and machine are at the same height, then adjust the 3-point top link so that the front of the machine is leveled to the back (the axis of the tiller PTO must be parallel to the ground), in order to limit stress transmitted to the tiller through the cardan shaft;
- Make sure that left side of the tiller is leveled with the right, by adjusting the tractor lifting arms, then lock the arms to prevent swinging that could compromise the stability of tractor and machine;
- Finally adjust the parking stand, placing it at the highest point by means of the related elastic pin.

4.3. DRIVELINE INSTALLATION

Before installing the driveshaft, the operator must read the manuals of driveshaft and tractor, checking in particular that rpm and direction of rotation of the tractor PTO match those of the tiller.

If the direction of rotation of the PTO tractor does not match that of the tiller, contact the manufacturer or your dealer.

To connect the driveshaft to the tractor and implement, the operator must:

- Park tractor and tiller on a flat surface, with parking brake set, engine off, and ignition key removed;

- Check that safety devices of driveshaft, tiller and tractor are in good condition, otherwise provide for their replacement;
- Remove the PTO shield of the tiller through the fixing screws;
- Position the driveshaft with clutch turned towards the implement side;
- Insert the clutch hub on the tiller PTO, then ensure its tightening onto shaft through its fastener;
- Replace the PTO shield of the tiller through the fixing screws;
- Insert the driveshaft yoke on the tractor PTO, then ensure its tightening onto shaft through its fastener;
- Hook to the tractor and tiller the two retaining chains of the the driveline shielding, to prevent shielding rotation during functioning of the machine.

DRIVELINE LENGTH CHECK

Before operating the tiller, ensure that the size of driveshaft is adequate. The driveshaft supplied with the machine has a standard length, therefore it may need an adaptation of the length, depending of the tractor which the tiller is combined.

The length of the driveshaft must be such to:

- Avoid bottom out of the transmission tubes, when the driveshaft is in compressed position (when tiller is raised up off the ground);
- Ensure an overlapping of the transmission tubes enough to transmit the torque required, when the driveshaft is in max extension (when tiller is in its lowest position in the ground).

When the driveshaft is at its minimum length (max compressed position), there must be at least a 2 cm of distance between the ends of each transmission tube and the yokes side.

When the driveshaft is at its maximum operational extension, there must be an overlap between the tubes profiles of 15 cm at least.

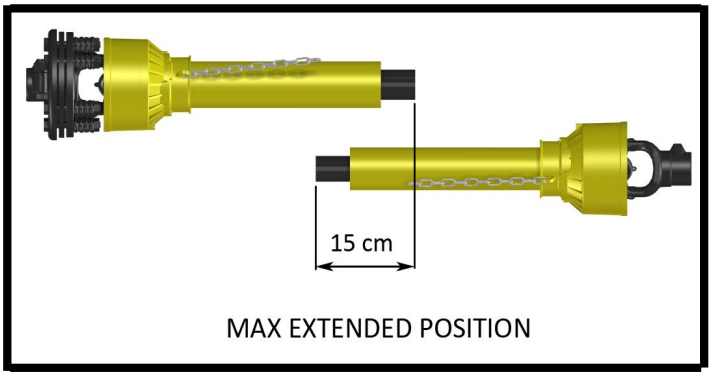

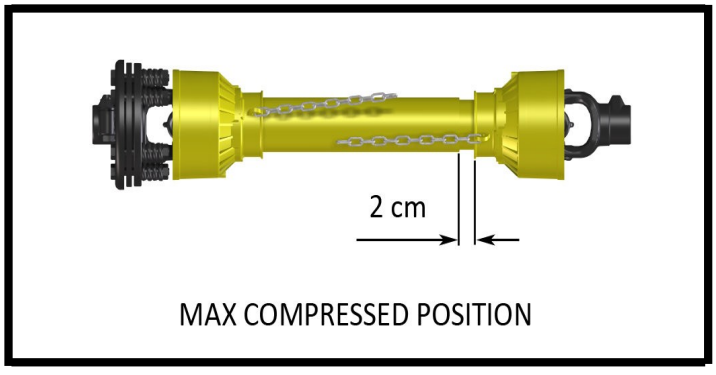

A driveshaft too long may cause structural damages to the tractor and machine. If the driveshaft is too long, it may be adapted by removing it and shortening the tubes according to the instructions provided by the manufacturer in its use and maintenance manual.

A driveshaft too short can cause disengage of the tubes during operation, with severe hazard for the operator and structural damage to the tractor and machine. If the driveshaft is too short, it must be replaced with a longer one. In this case contact the manufacturer or your dealer.

IMPORTANT

- Before operating the tiller the first time, make sure that the driveshaft is lubricated in accordance with how indicated in the instruction booklet;
- Before operating the tiller the first time, and after long periods of inactivity, make sure that the driveline clutch has run a short "run in" in accordance with what indicated in the instruction manual of the manufacturer, removing the possible oxidation of the components that may compromise the correct slipping during the usage (see also section "Maintenance");
- Always engage the tractor PTO at low rpm to minimize the effect of the peak torque on the driveline and the machine.

4.4. TRACTOR-TILLER STABILITY

The weight of the machine modifies the stability of the system tractor-tiller, resulting in loss of steering control and braking.

The front axle of the tractor should always loaded with at least 20% of the overall weight of the system tractor-tiller.

⚠ CAUTION

Check the lifting capacity and stability of the tractor making sure the following relations are complied with (see table below for definitions):

$$1)\ M \times (S1+S2) \leq 0.2 \times T \times i + Z \times (d+i)$$

$$2)\ M \leq 0.3T$$

If this not occurs, apply the front ballast required. To determine the appropriate characteristics of the ballast, refer to the manual of the tractor.

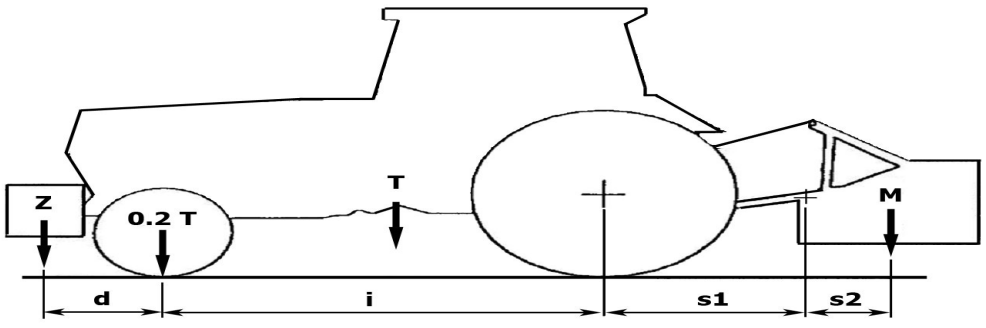

i = Tractor wheelbase (cm)
d = Distance between front axle and ballast center of mass (cm)
T = Weight of tractor + operator (75 kg)
Z = Ballast weight (kg)
M = Implement weight (kg)
S1 = Distance between rear axle and lower hitch points (cm)
S2 = Distance between lower hitch points and implement center of mass = 29 cm

5. OPERATING

Before operate the tiller, make sure you have read and understood the operating manuals of the tiller, tractor and PTO shaft, and followed what is described in the section "Set Up".

⚠ DANGER

During operation, adjustment, maintenance, repairing or transportation of the machine, the operator must always use appropriate Personal Protective Equipment (PPE).

Before starting work, ensure that all machine guards are in good conditions and fully functional.

During operation, the machine can throw material from the back: prevent people and animals to approach the operational area.

5.1. START UP

Before the start up and before each use, perform the following pre-operation inspections and service of the implement:

- Check that the tiller has not damaged functional parts and has all mechanical parts in good condition. Repair and / or replace the damaged parts;
- Check that the tiller has no missing parts (pins, safety pins, plugs oil ...). Restore the missing parts;
- Check that all guards and safety devices have no damages and are properly positioned. Repair and / or replace the damaged shieldings, restore the correct position;
- Verify that the PTO driveshaft is properly installed (see section: Connection of the drive shaft);
- Check that the driveshaft clutch is in good condition, and that its components are not subject to "sticking" (see section: Maintenance / Driveline);
- Check the presence of lubricant in all greasing points of the tiller (driveshaft, supports...) (see sect. Maintenance / Driveline and Maintenance / Support rotor);
- Check for oil leaks from the gearbox or the transmission side cover. Identify the reason of loss, then repair and / or replace the damaged components;
- Check the correct oil level in the gearbox and in transmission side box (see section maintenance);
- Check that blades are not excessively worn and the relating hardware is correctly tightened (see sect. Maintenance);
- Check that all the tiller hardware is properly tightened. Refer to the tightening table in the manual for proper torque values;
- Check that all safety decals are correctly positioned, in good condition and legible. Replace any damaged decals;
- Check that there is no constraints that may prevent the movement of equipment. Remove any constraint.

Before the start up and before each use, make the following checks on the operating area identified for tillage:

- Check that area is clear of foreign objects (rocks, branches or debris). Remove any obstacle and visibly highlight obstacles that cannot be eliminated (e.g. by means flags);
- Make sure in the working area exposed there are no people or animals;

- Make sure the soil to be worked is not too grassy, muddy, sandy or rocky.

⚠ WARNING

Before conducting the above inspections and service, make sure the tractor engine is off, all rotation parts are completely stopped and the tractor is in park with the parking brake engaged. Make sure the tiller is resting on the ground or securely blocked up and the tractor lifting hydraulics locked.

Once all the checks above have been done, start tractor and the tiller as follows:

- Start the tractor and engage the tractor PTO at low rpm, making sure that the tiller is NOT in the raised position but close to the ground, then increase speed engine until to 540 rpm;
- Lower the tiller on the ground and simultaneously start driving the tractor at low speed. Subsequently increase the ground speed depending on ground conditions;
- If the environmental temperature is very cold , it's recommended to wait a few minutes with the PTO of the tractor at low rate before lowering the tiller completely on the ground;
- Drive for a while operating the tiller, then stop the tractor to check the quality of the work performed. If you need to get off the tractor, lift the tiller just out of the ground, reduce engine speed and disengage PTO, set the parking brake, stop engine and remove the ignition key;

  If the working depth and/or soil texture are not as desired, correct them by adjusting the skids and/or the rear cover (see section Adjustments).

5.2. OPERATING INSTRUCTIONS

During operations:/ OPERATE ACCORDING TO FOLLOWING INTRUCTION

- Always keep the tractor engine at rpm rate ensuring to the tiller the right power required for the use;
- Always keep a tractor speed adequate to conditions of the soil to be worked (from 2 to 10 km / h approx.). Reduce speed in the case of hard or stony soils;
- Choose a driving pattern that provides the maximum pass length and minimizes turning;
- When working in the hills, if you can do "climbing" in the sense of the slope, in any case do not work along the hillsides, making the steps from top to bottom to reduce the terrace Where possible always try to «work up» the slope. If this is not possible avoid hoeing along the contours of the hill and hoe up and down the slope to avoid a terracing effect;
- Always perform changes and reverse of direction with PTO disengaged and the tiller slightly lifted from the ground to avoid damage to the machine;
- Periodically check for foreign objects wrapped around the rotor shaft and remove them, after disengaging PTO, turning off tractor engine, and removing ignition key;
- If the blades strike a foreign object, or in case of prolonged intervention of the clutch due to an object wedged into the rotor, stop operating immediately, idle the engine speed and disengage the PTO. Wait for stopping of all rotating parts, then raise the implement and proceed to removing the object, after stopped the tractor, set the parking brake, stopped engine and removed the ignition key. Repair any damages immediately, and make sure rotor and blades are in good condition before restarting operation;
- Avoid friction clutch overheating caused by too long or too frequent slipping of the clutch, since this can damage the friction plates and clutch parts.

Typical problems that may occur operating the tiller are described into Troubleshooting section, together with their solutions.

5.3. ADJUSTMENTS

⚠ WARNING

All adjustment operations must be performed with the tractor engine off, the PTO disengaged, the tiller lowered to the ground or on security stands, the parking brake set and the ignition key off.

LOWER CLEVISES ADJUSTMENT

It is possible to adjust the lower hitch position, remove linch pin 1 (see picture) & remove Pins 2, and shift position of hitching arm from A to B (or vice-versa).

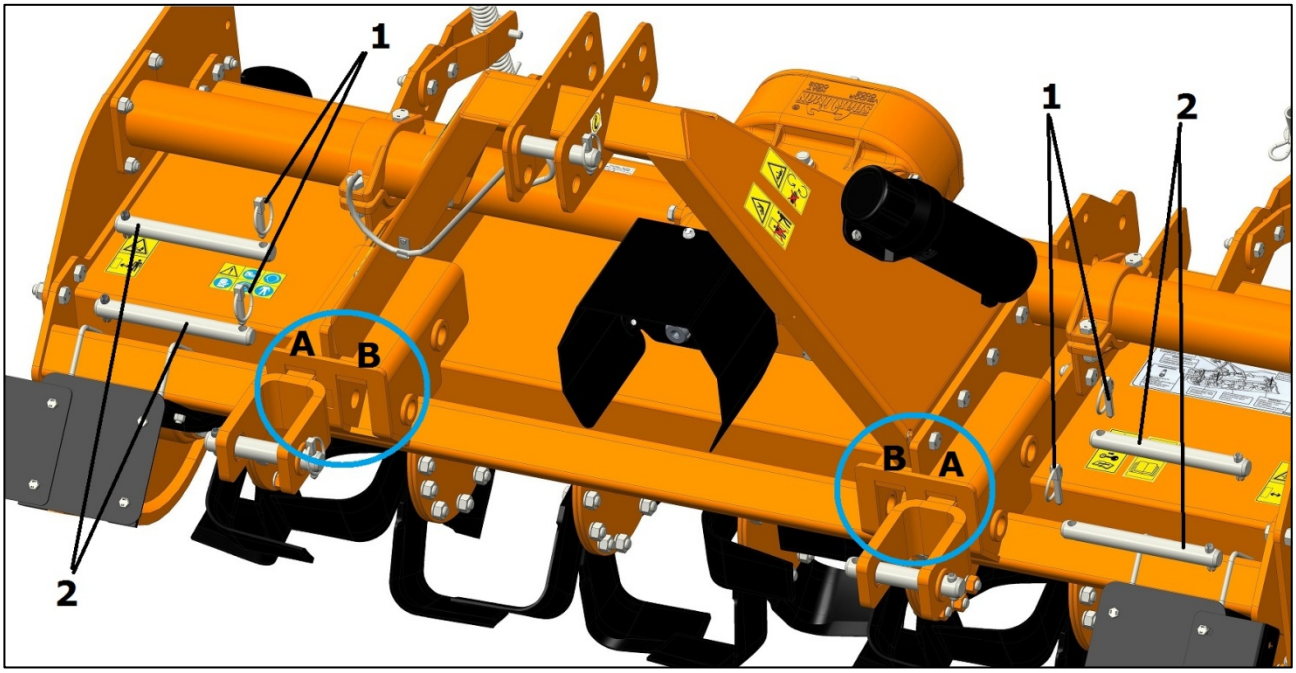

FRICTION CLUTCH ADJUSTMENT

The PTO driveshaft and friction clutch are designed to transmit adequate power to the tiller.

The clutch preserves the machine from overloads, through the slipping of friction discs, and limits the max torque transmissible to a calibrated value set at factory. It is recommended, therefore, to leave unchanged this value to avoid damages to the machine or to driveshaft.

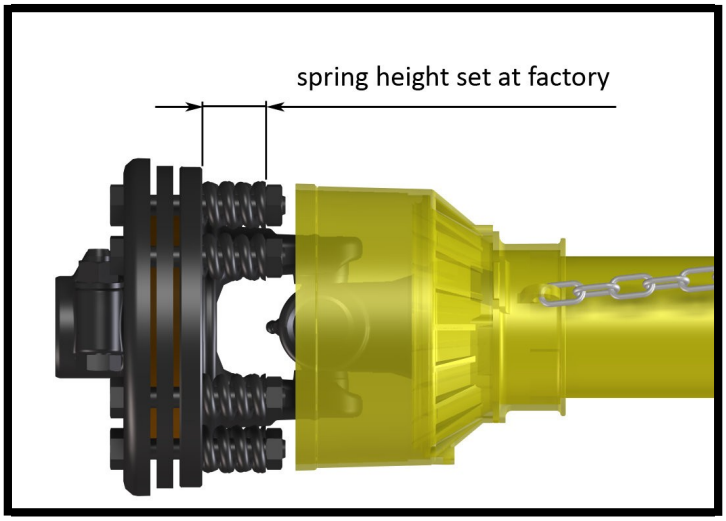

An adjustment can be done, however, when the clutch slipping is too frequent, which means that the calibration is too low.

In this case, the tightening of nuts over the compressed springs will give an increase in torque transmissible.

On the contrary, a loosening of the nuts over the springs will give a decrease in torque transmissible.

IMPORTANT

For details about clutch adjustment, refer to the user manual of the manufacturer of the driveshaft installed.

The manufacturer is not liable for damages resulting from a wrong modification of the clutch calibration.

NOTE

Excessive tightening of the springs can prevent the clutch from slipping and to protect the machine from overload.

Make sure that the height of all the compressed springs is equal to prevent clutch malfunctioning.

SKIDS ADJUSTMENT

The working depth of the tiller is determined by the position of the side skids: it may be increased by raising the skids, and decreased by lowered them. It's important that both skids are adjusted at the same height.

To adjust the working depth, perform the following steps:

- Lift the machine, put it safely on security stands, then switch the tractor engine off, disengage PTO, set parking brake and off the ignition key;
- Loosen the bolts in the front of the skid (bolt 1 - see picture);
- Unscrew and remove the bolts on the rear of the skid (bolt 2 - see picture);
- Adjust the height of the skid through the holes, as desired;
- Reinstall the bolts 2 (refer to the tightening table of this manual for proper torque values);
- Tighten the bolt 1 (refer to the tightening table of this manual for proper torque value).

When finished, verify that both skids are at same level, and check if the front of the tiller is leveled to the back, when lowered to the ground. Adjust with the 3-point top link if necessary.

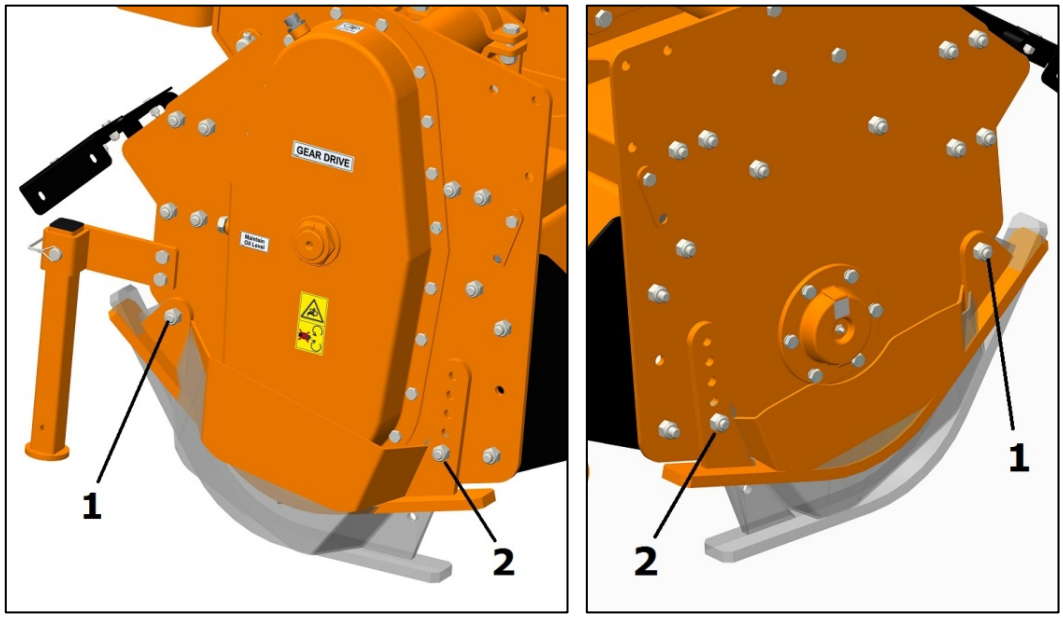

REAR BOARD ADJUSTMENT

The Trailing Board can be adjusted closer to the ground to produce a fine soil texture or can be raised to produce a coarse soil texture.

Follow below steps to raise the trailing board:

- Remove the pin (2) from the tube, and place it in the hole immediately below;
- Lift the cover;
- Remove the pin (1) from the tube of each adjuster, and place it in the hole immediately below.

To lowering the trailing board, it is required to bring the covers in less open position, acting on the spring adjusters in opposite way as described above.

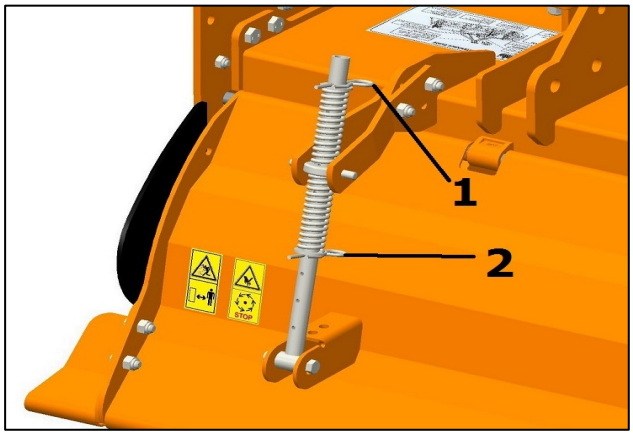

⚠ NOTE

Too much pressure will cause premature wear on trailing board.

⚠ WARNING

To avoid the risk of crushing or cutting of fingers, raise or lower the rear board only from the lower edge, not from the sides.

A further possibility to make the adjustment of the rear covers adjustment is given by the presence on the tiller frame of several positioning holes designed to clamp the fixing elements of the spring adjusters.
By changing the position of the fixing elements (1) of the spring adjusters on the positioning holes of the tiller frame (2), it is possible raise or lower the leveling effect of the covers without acting on the spring adjusters (see picture below):

IMPORTANT

Make sure that all spring adjusters are set in the same way, so that the weight of the covers is equally divided between them.

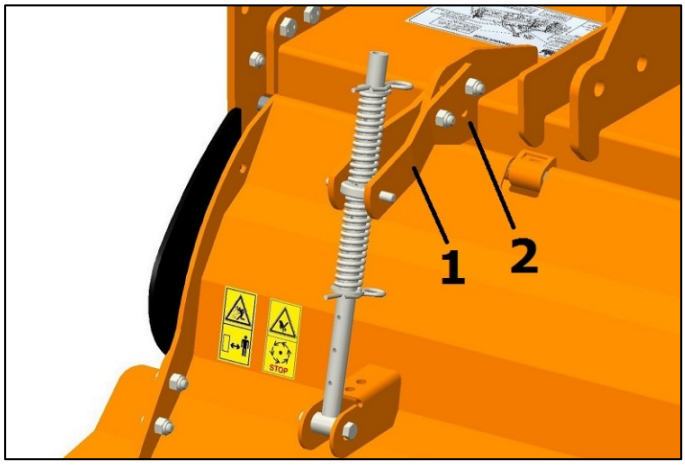

GEAR BOX SPEED ADJUSTMENT

The central gearbox of the tiller is equipped with two pairs of interchangeable gears, (a default and a reserve pair). In function of the pair of gears selected and of the speed at the input shaft (540 or 1000 rpm), it is possible obtain different speeds of rotation of the rotor, in order to meet different needs of the operators. Higher rotation speeds of the rotor correspond to a greater crushing of the ground.

The permitted combinations for the pairs of gears, with the relative speed of rotation of the rotor, are printed on a Sticker applied to the machine, as given below:

ROTOR SPEED CHART [FRESA VH (VIKTOR)]
TABELLA VELOCTÀ ROTORE

INPUT RPM RPM IN ENTRATA	GEAR PAIR COPPIACONICA A	GEAR PAIR COPPIACONICA B	ROTOR RPM GIRI / MINUTO ROTORE
540 RPM	① 18	17	214
	17	18	240
	② 16	19	269
	19	16	191
750 RPM	18	17	297
	17	18	333
	16	19	373
	19	16	265
1000 RPM	18	17	396
	19	16	353

D1127

① Standard Active Pair - Coppia Attiva Standard
② Extra Pair - Coppia Extra

To change the speed, the operator must:

- Remove the 3 screws (1) of the back cover of the gearbox;
- Remove the gear (2) and (3) from the shafts, exchange their position, then replace them on the shafts. Alternatively, replace the pair of default gears (2) and (3) on the shafts with the gears (4) and (5) of the reserve pair, which are keyed on two pins of the back cover of the gearbox;
- Retighten the four screws (1) of the back cover of the gearbox.

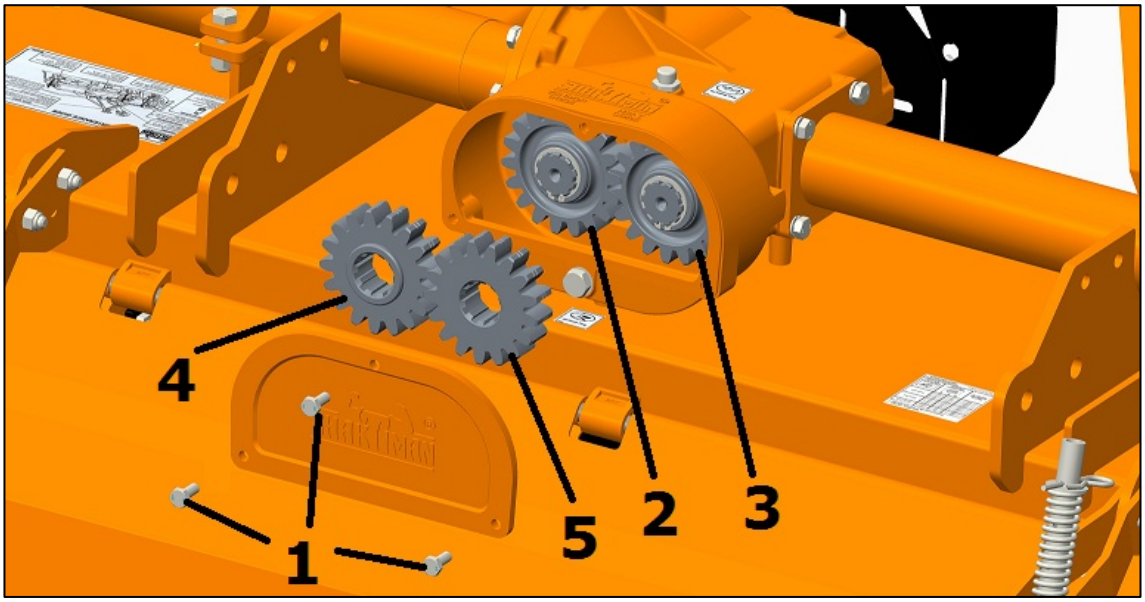

WARNING

Before perform a gearbox speed adjustment, make sure that the temperature of the gearbox is low enough to allow the necessary operations. Wear the required PPE, in particular the gloves, because of danger of burns.

Before opening the back cover of the gearbox, reduce the level of the oil to avoid spill out, following the instructions in the section "Gearbox lubrication".

The configurations permitted for the pair of gears and speeds are indicated in the table. The use of different configurations can seriously affect the functioning of the tiller, damaging it permanently.

Any adjustment on the gearbox must be done with the machine disconnected from the tractor or the tractor with the engine off and the machine on the ground.

5.4. STOPPING AND DISCONNECTION

To stop the tiller at the end of a working session:

- Bring the tractor to a complete stop;
- Place the transmission in park or neutral;
- Reduce the engine speed, then disengage the PTO;
- Wait for stopping of all rotating parts;
- Lower the implement to the ground;
- Set the parking brake;
- Shut down the engine and remove the key before exiting the tractor;
- Do the cleaning and maintenance required to make the machine ready for later use (see Section Maintenance).

⚠ WARNING

Never leave the tractor unattended with the implement in the lifted position.

To disconnect the tiller from the tractor (e.g. to make a change of implement):

- Adjust the skids to their lowest position (see Section Adjustments);
- Adjust the parking stand to the lowest position, through the use of relative retaining pin;
- Park the tractor on a dry and level surface;
- Reduce the engine speed, then disengage PTO;
- Wait for stopping of all rotating parts;
- Lower the implement to the ground;
- Set the parking brake;
- Shut down the engine and remove the key before exiting the tractor;
- Place safety blocks under tiller to prevent unit from tipping over onto a child and/or an adult. A tiller that tips over can result in injury or death;
- Disconnect the driveline from the tractor PTO and rest it on the provided support of the tiller;
- Disconnect the top link and rear lifting arms of the tractor from the tiller hitches;
- Check the tiller stability. If needed, place additional safety blocks;
- Get on the tractor, start the engine and move away from the tiller slowly;
- Make sure the tiller remains stored in a protected area, to prevent that unauthorized personnel can approach it.

Before a long term storage (e.g. at seasonal end), do cleaning and maintenance operations as specified in Sections MAINTENANCE and STORAGE.

5.5. TRASPORTING

To set the tiller for transportation, perform the following steps:

- Idle tractor engine, disengage tractor PTO, and wait for stopping of all rotating parts;
- Lift the tiller until the transport position, making sure the driveline transmission tubes does not contact tractor or tiller. A minimum gap of 2 cm should be leaved between the tubes and tractor and tiller (see also Section Driveline installation);
- Lock the tractor lifting hydraulics, turn off the engine, set the parking brake, remove ignition key and get off the tractor;
- Adjust the parking stand to the highest position, through the use of relative retaining pin, to prevent its possible damage during transport.

When driving on public roads, follow strictly all local laws and traffic regulations.

⚠ WARNING
When driving on public roads, reduce your speed, be aware of traffic around you and proceed in such a way that faster moving vehicles may pass you safely.

6. MAINTENANCE

Proper and regular maintenance ensures a long life of the equipment, avoids failures and saves time and repair costs.

Periodic inspections and maintenance operations described in this section must be performed by operator in the times and terms prescribed. Failure to comply with maintenance prescriptions can compromise the functioning and duration of the machine, and consequently invalidate the warranty.

The frequency of maintenance indicated refers to normal conditions of use: it must be intensified in severe operating conditions (frequent stops and starts, prolonged winter season etc …).

Repairs, maintenance and modifications other than those mentioned in this paragraph should NOT be performed without consulting the manufacturer or your dealer. Manufacturer, as the case, may give the authorization to proceed with the repair together with all necessary instructions.

Wrong or inappropriate repairs or maintenance may generate abnormal operating conditions, equipment damage and generate risks for the operator.

⚠ WARNING
For safety reasons, all maintenance operations must be performed with tractor PTO disengaged, tiller stopped and completely lowered to the ground or onto support blocks, parking brake set, tractor engine shut off, and ignition key removed.

IMPORTANT
Respect the environment. Store or dispose of unused chemicals as specified by the chemical manufacturer.

6.1. BLADES REPLACEMENT

Frequently check the wear condition of blades through visual inspection. The wear of blades is very variable depending on the type of soil.

Replacement of the blades is necessary when the operator notices increase of power absorption during tilling, or when the blade dimension is significantly reduced compared to the original.

The use of the machine with blades in bad condition compromises the quality of work.

Before perform replacement of the blades:

- Idle tractor engine, set the parking brake, disengage tractor PTO, and wait for all moving parts to come to a complete stop;
- Place the tiller slightly lifted from the ground on safety blocks or mechanical stands;
- Lock the control lever of the hydraulic lift of the tractor;
- Turn off the tractor and remove the key.

To perform the replacement of blades:

- Remove the two bolts and washers clamping the blade to the rotor flange, then remove the blade;
- Position the new blade exactly instead of the worn blade, then tighten the bolts, referring to the tightening table of this manual for proper torque values. Be sure to install the blade with cutting edge in front of the direction of rotation;
- Repeat the same procedure for all the other blades.

At the end of the replacement, make sure the blades have the right helical arrangement, as shown in the figure:

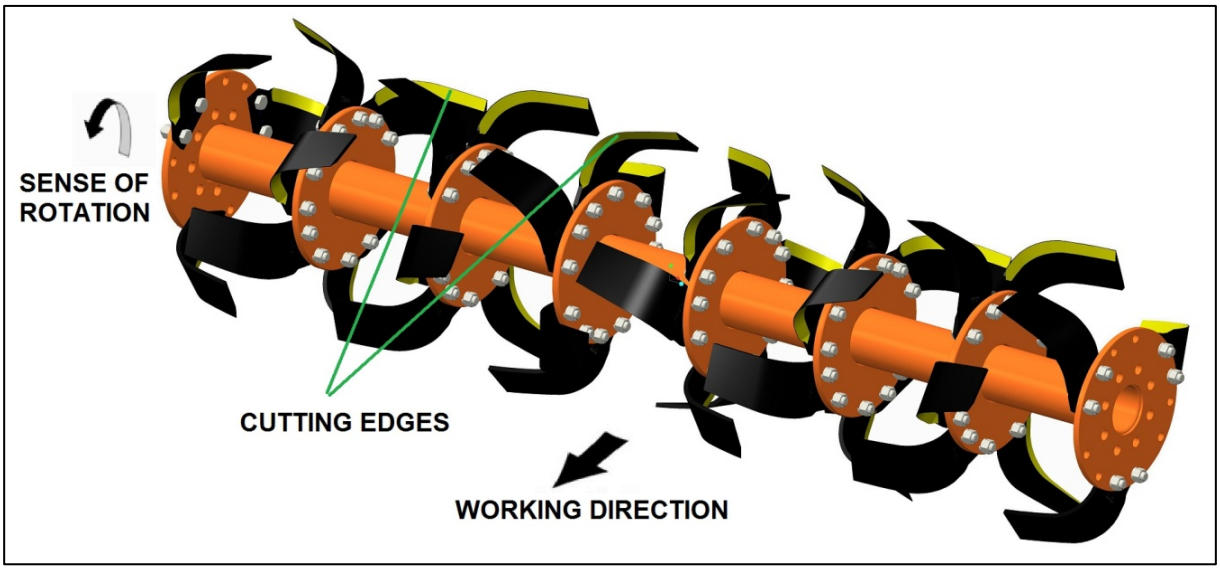

Periodically check the tightness of screws and nuts, and tighten if necessary.

IMPORTANT

Remove and install one blade at a time to ensure blades are correctly oriented when installed.

Replace worn blades only with original parts.

⚠ CAUTION

Worn tines may be very sharp!

6.2. GEARBOX LUBRICATION

Lubricant: SAE EP 80W90 gear oil

Check the oil level every 50 hours, making sure the oil mark left on the dipstick of the filling plug (top of gearbox) is located between the two reference marks (minimum and maximum).

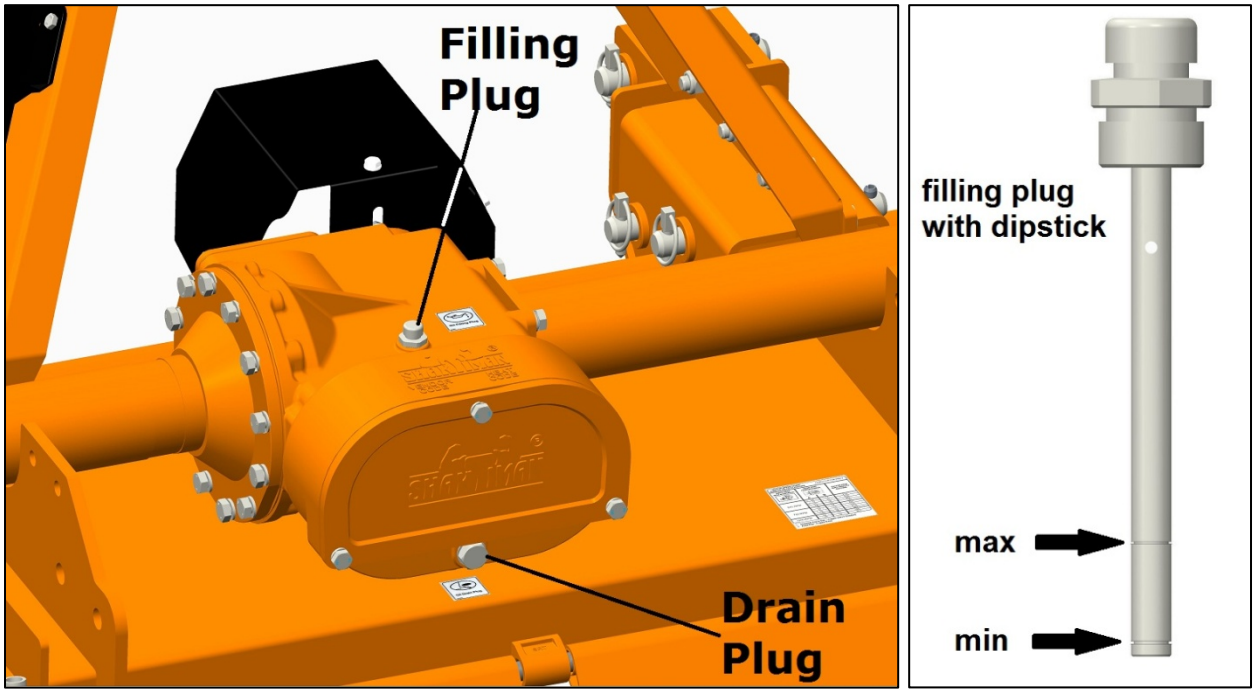

If the sign is below the minimum, fill up oil till restore the correct level.

The oil change must be performed:

- After the first 50 working hours;
- Each 500 working hours.

To make the oil change:

- Place a tank under the oil drain plug (bottom of gearbox) ;
- Unscrew the oil drain plug and drain oil completely into the tank;
- Retighten the drain plug;
- Unscrew the oil filling plug;
- Fill up oil till restoring the correct level (between the two reference dipstick marks) ;
- Retighten the filling plug;
- Dispose the discharged oil into containers for used oil.

⚠ CAUTION

Before touching the gearbox wait until it has cooled sufficiently.

IMPORTANT

Frequently check possible oil leaks from tiller through visual inspection, and in case of leakage provide immediately proper maintenance.

Avoid oil leaks on the ground when restoring oil level or making oil change.

6.3. SIDE CASE LUBRICATION

Lubricant: SAE EP 80W90 gear oil

Check the oil level every 50 hours, making sure it reaches the level plug on the transmission cover. If the oil is below this level, fill up oil till restore the level.
The oil change must be performed every 500 working hours.

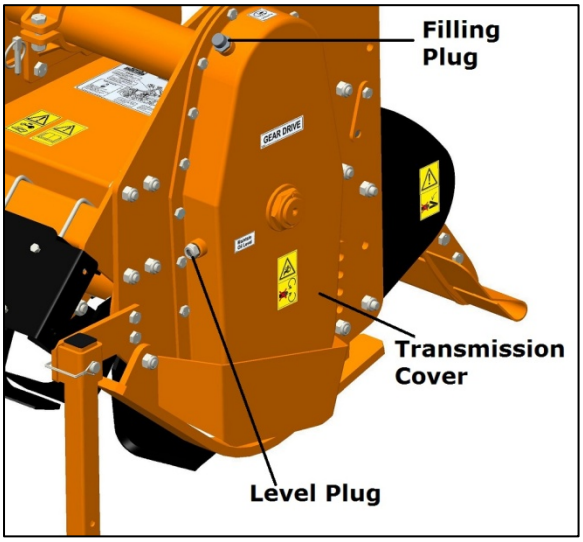

To make the oil change:

- Remove the skid from the transmission side;
- Place a tank under the oil level plug;
- Unscrew the oil level plug and drain completely the oil into the tank;
- Retighten the level plug;
- Unscrew the oil filling plug (top of transmission cover);
- Fill up oil till restoring the correct level (until level plug);
- Retighten the filling plug;
- Replace the side skid;
- Dispose the discharged oil into containers for used oil.

6.4. BEARING HOUSING LUBRICATION

Lubricant: SAE multi-purpose lithium-type grease

Grease the rotor hub support every 8 working, through a suitable grease gun.

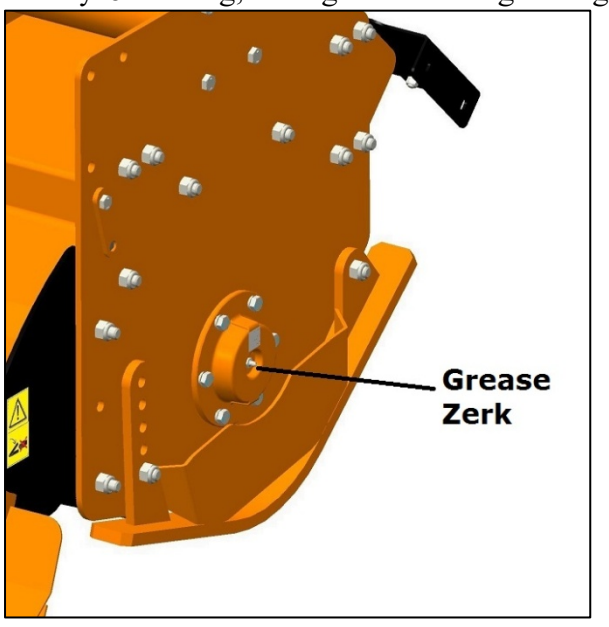

IMPORTANT

Make sure to clean the fitting zerk before using grease gun.

Do not let excess grease collect on or around parts, particularly when operating in sandy areas.

6.5. DRIVESHAFT MAINTENANCE

Lubricant: SAE multi-purpose lithium-type grease

Grease crosses, sliding parts of protective shielding and driveshaft transmission tubes.

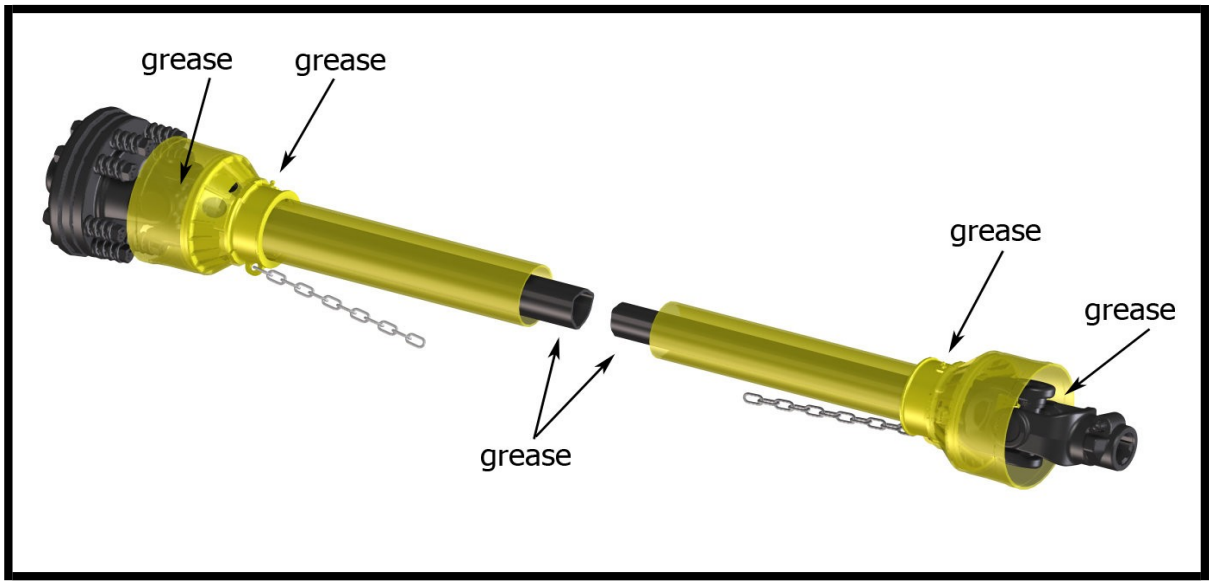

IMPORTANT

For details about maintenance and lubrication of the driveshaft, refer to the user manual of the driveshaft manufacturer.

Driveshaft clutch:

Exposition to the elements of tiller and driveshaft, or a long period of inactivity, generally results in oxidation of some clutch components, and creates "sticking" effect on the clutch.

Consequently, the torque required to the slippage of the clutch increases considerable respect to the value set at factory, and this may be cause of driveshaft breakage during operation, or damage to the tractor or implement.

To avoid it, before re-using the tiller, operator must perform a short "run-in" of the clutch, as follows:

- Take note of the height of the compressed springs;
- Loosen the bolts that compress the springs;
- Connect the tiller to the tractor (see section Conneting to the tractor) ;
- Connect the driveshaft (see section Driveline installation) ;
- Start the tractor and engage PTO for few seconds, in order to cause slippage and separation of the parts "sticked" of the clutch;
- Turn off the tractor, remove key and wait for all components are stopped before dismounting from tractor;
- Retighten the bolts restoring the original springs position on the driveshaft.

NOTE

For replacement of the driveshaft service parts (e.g. friction discs), refer to the user manual of the driveshaft manufacturer.

7. STORAGE

Before leaving the tiller unused for a long time, it's necessary to perform following tasks to preserve the appearance and functionality of the machine, and to make easier the restart at later use:

- Park the tiller on a flat surface, in a place dry and protected from exposition to the elements, possibly with storage temperature between 0 and 50 ° C (see Section Stopping and disconnection);
- Thoroughly clean the machine, removing from the rotor all residues due to tillage, in order to avoid damage from grass and stagnant water;
- Inspect carefully the machine, checking for worn and/or damaged parts. Perform immediately all repairs and/or replacements needed, in order to make the machine ready for restarting;
- In case of abrasion of painted surfaces, provide restoring the surface protection through touch-up paint to prevent rust;
- Make sure the safety decals are in their original positions, intact and legible. When required, replace the decals immediately;
- Lubricate properly all grease points, and restore the oil levels as indicated in the maintenance Section. Use protective oil to coat the exposed mechanical components and to protect them against rust.

If the tiller driveshaft is equipped with a friction clutch, it is suggested to take note of the height of the compressed springs and loosen the bolts that compress the springs, to prevent the discs from "sticking" effect due to moisture, that may cause the clutch failure at restart of the activities (see also Driveshaft maintenance).

Before restart the operations, restore the original height of the springs.

8. SCRAPPING

In case of scrapping, the machine must be disposed in appropriate and authorized sites, according to local legislation.

Before scrapping, separate plastic parts from rubber parts, aluminum, steel, etc.

Recover and dispose any exausted oils to authorized centers for oil collecting.

9. TROUBLESHOOTING

PROBLEM	POSSIBLE CAUSE	POSSIBLE SOLUTION
Gearbox/transmission case noise noticeable and constant	Low oil level. Worn gears.	Add oil to the gearbox/transmission case. Replace gears
Intermittent noise from	Loose blades. Gear tooth damaged.	Tighten blades hardware Replace damaged gear
Noise and/or vibration from tiller	Blades worn or damaged. Bearings damaged. the front of the tiller is not leveled to the back. Rotor damaged. Hard soil.	Replace blades. Replace bearings. Adjust 3-point top link of tractor making tiller PTO parallel to the ground. Repair/replace rotor Reduce ground speed
Driveline vibration	Worn driveshaft . Machine lifted too high. Debris wrapped on rotor.	Replace driveshaft. Lower machine and readjust tractor lift stop. Remove debris.
Rotor stops turning	Slip clutch slipping. Broken gears in gearbox/side transmission case.	Reduce load to tiller or adjust slip clutch. Replace broken gears.
Machine skip or leaves crop residue	Badly worn blades. Slip clutch slipping. Ground speed too fast for conditions.	Replace worn blades. Adjust slip clutch or reduce load. Reduce ground speed .
Smoke and/or hot smell from tiller	Debris wrapped around in blades and/or rotor. Low oil level in gearbox. Slip clutch slipping.	Remove debris. Add oil Reduce load to machine or adjust slip clutch.
Gearbox overheating	Low oil level. Hard soil.	Add oil. Reduce ground speed.
Blades wear frequently	Muddy or sandy soil.	Reduce ground speed.
Blades break frequently	Stony soil.	Reduce ground speed.
Oil leaking from gearbox/ transmission case	Gearbox/transmission case overfilled. Loose filling/drain plug. Damaged breather plug.	Drain to proper level. Tighten filling/drain plug.
	Damaged seals.	Replace breather plug. Replace seals.

Tillage depth insufficient	Tiller is carried by tractor. Tractor has insufficient power. Skids need adjusting. Blades worn or bent. Blades incorrectly installed. Debris entangled in blades and/or rotor.	Lower tractor 3-point arms. Increase PTO speed Adjust skids. Replace blades. Install tines correctly. Clear rotor and/or blades
Soil texture too coarse	Rear board too high. PTO speed too slow. Ground speed too fast.	Lower rear board. Increase PTO speed. Reduce ground speed.
Soil texture too fine	Rear board too low. Ground speed too slow.	Raise rear board Increase ground speed.
Tiller choking up with soil	Blades worn or bent. Blades incorrectly installed. Rear board too low. Soil too wet.	Replace blades. Install tines correctly. Raise rear board. Wait until soil dries.
Tiller skiping on ground or leaving crop residue	Blades incorrectly installed (wrong helical arrangement, cutting edge in wrong direction...) Debris entangled in blades and/or rotor. Ground speed too fast. Soil too hard.	Install blades correctly (replace right helical arrangement, position cutting edge in front of rotation direction…) Clear rotor and/or blades. Reduce ground speed. Reduce ground speed and make tilling in more steps.
Tillage not uniform	Blades worn or damaged. Skids not aligned. Tiller left side not leveled with right side.	Replace blades. Align skids. Adjust tractor 3-point arms.
Too load required to tractor	Excessive working depth . Excessive PTO speed.	Lower skids. Reduce PTO speed.

10. TORQUE VALUES TABLE

Check frequently tiller hardware to make sure that screws and bolts are tightened according to torque values listed in following table:

	8.8 grade		10.9 grade	
BOLT SIZE (METRIC)	N m	Ft lb	N m	Ft lb
M6	11	8	15	11
M8	26	19	36	27
M10	52	39	72	53
M12	91	67	125	93
M14	145	105	200	150
M16	225	165	315	230
M18	310	230	405	300
M20	440	325	610	450

11. WARRANTY

Titan Implement LLC. offer the following warranty to the purchaser of TITAN IMPLEMENT equipment mentioned herein above subject to the conditions set out herein after provided the TITAN IMPLEMENT equipment shall be in the possession of and used by such purchaser from the date of delivery.

Titan Implement LLC. Warrants its products for a period of twelve (12) months from date of delivery, for manufacturing or material defects only. Failed part will be replaced at its authorized dealers only and any part component there of that shall be examined by them, shall disclose if to be defective. This warranty shall not apply to equipment or parts that have been subject to negligence, or accident, or not maintained as per company instructions specified in operator manual or that have been altered or repaired or used with non-genuine parts or abused or due to contaminated oil or used in not recommended application.

Warranty Terms & Conditions:

1) The purchaser of TITAN IMPLEMENT equipment should strictly follow the instruction given in the instruction manual provided by the company along with the TITAN IMPLEMENT equipment at the time of delivery. Changes if any, resulting in improper usage will not be covered by the warranty. This warranty will automatically terminate on the expiry of warranty period of Six months even the TITAN IMPLEMENT equipment may not be in use for any time during the warranty period for any reason whatsoever including any technical reasons and time taken for such repairs/replacement of parts, and in transit, whether under this warranty or otherwise shall not be excluded from the warranty period.
2) All wear and tear items like bearings, chains, sprockets, oil seals, tines, blades, rubber parts and gaskets are not covered under warranty.
3) All items with normal wear or failure due to normal wear will not be covered under warranty.

4) While the company or authorized dealers will make every effort to carry out repairs/replacement of parts under this warranty as soon as possible. It is expressly made clear that the company shall not be liable to do within any specific period of time.
In the event of repairs/replacement of any parts, this warranty will thereafter continue to remain in force only for the unexpired period of warranty.

5) It is entirely left to company discretion to repair/replacement of parts at the site of delivery or at the authorized service points of its dealers. The defective parts which has/have been agreed to be replaced, should be returned to the company without any further claim.

6) The warranty shall not cover any consequential or resulting liability, damage or loss arising directly or indirectly out of any defect in the TITAN IMPLEMENT equipment. This warranty shall be strictly limited to repairs and replacement of the defective parts specified in the warranty, and
does not cover any reimbursement of labour charges for any repairs so earned out at dealer/client end.

7) This warranty shall not be extended in any case of replacement or return of the TITAN IMPLEMENT equipment as a whole. Only failed parts will be covered under warranty.

8) The purchasers of TITAN IMPLEMENT equipment will itself fully responsible for model/variant selection.

9) This warranty does not cover for statutory duties and taxes like excise, service tax or CST or VAT or State sales tax and octroi and any other local taxes payable on any of the parts which the company may supply or repairs free of cost during the warranty period.

10) This warranty also does not cover the cost of packaging, to and fro freight and transportation charges etc., on the defective TITAN IMPLEMENT equipment or other parts of the TITAN IMPLEMENT equipment sent to company's works in Rajkot or to the authorized service station.

11) Warranty becomes void if:

a) The TITAN IMPLEMENT equipment has not been delivered, assembled, started and put into operation by the company or its authorized representative.
b) The dully filled delivery certificate is not in our possession within 15 days from the date of delivery.
c) The TITAN IMPLEMENT equipment or any parts thereof is subjected to neglect, fire, floods or other acts of God or if in the company's opinion any damage has caused to the TITAN IMPLEMENT equipment during transportation.
d) The original serial number is removed, obliterated or altered from the unit.
e) Any attempt is made to have the repairs executed by a person or persons, other than the company or its authorized representative.
f) Any defect is not informed immediately to the company or its authorized representative, any alteration in warranty card is made.
g) Whenever the user or anyone else on his behalf applies equipment to the tractor or to prime mover that has not been expressly approved by the manufacturer or not suitable to the equipment.

12) a) Any changes in the location of the TITAN IMPLEMENT equipment or in the/its ownership thereof during the warranty period must be intimated in writing to the company or its authorized dealer within ten days before the change. Failure to do so will absolve the company from the obligation under this warranty.
b) Further, in the case of shifting for the continuation of the Warranty, the TITAN IMPLEMENT equipment has to be inspected by the company or its authorized representative before shifting from the original location and before using it at the new location. The inspection free levied by the company or its authorized representative as well as the cost of rectification of any damage in transit, detected in the above inspection, shall be borne by the purchaser/owner, if at the time of restarting, the TITAN IMPLEMENT equipment is found to be in working order, this warranty shall continue to be in force for the remaining period of the warranty.
c) Damage to the TITAN IMPLEMENT equipment or any part thereof caused during shifting or transportation is not covered by this warranty

13) None of the company representative or authorized dealer is authorized to alter/amend any terms and conditions of this warranty policy. Only the management of the company is authorized to do so. The decision of the company will be final and binding to the purchaser.

14) This warranty is given in lieu of all other guarantees and condition expressed or implied by law or by the any person purporting to act on behalf of the company and excludes every condition, warranty or guarantee not herein expressly set out.

Note: The parts/material that are not covered by this warranty are as follows:

1. Blades
2. Universal joint cross
3. Paint
4. Bearings
5. Rubber parts
6. Gaskets
7. Fasteners
8. Fabrication
9. Chains & sprockets
10. Tines

12. SPARE PARTS

All repairs and replacements on the machine must be performed only by using original spare parts, which must be obtained / provided from the manufacturer or your dealer.

This section contains the information needed to identify the parts of U-series tillers that may be ordered to manufacturer.

When request spare parts to manufacturer, always give following indications:

- Type of machine;
- Tiller serial number;
- Description and p/number of the spare parts;
- Quantities.

NOTE

For identification of p/numbers and description of safety decals refer to the Section Safety labels.

For identification of p/numbers and description of PTO driveline parts, refer to the manual of the driveshaft manufacturer.

The Manufacturer reserves the right to substitute a required part with an equivalent part, if applicable.

PARTS MANUAL
VH90 SERIES

ACCESSORIES PARTS

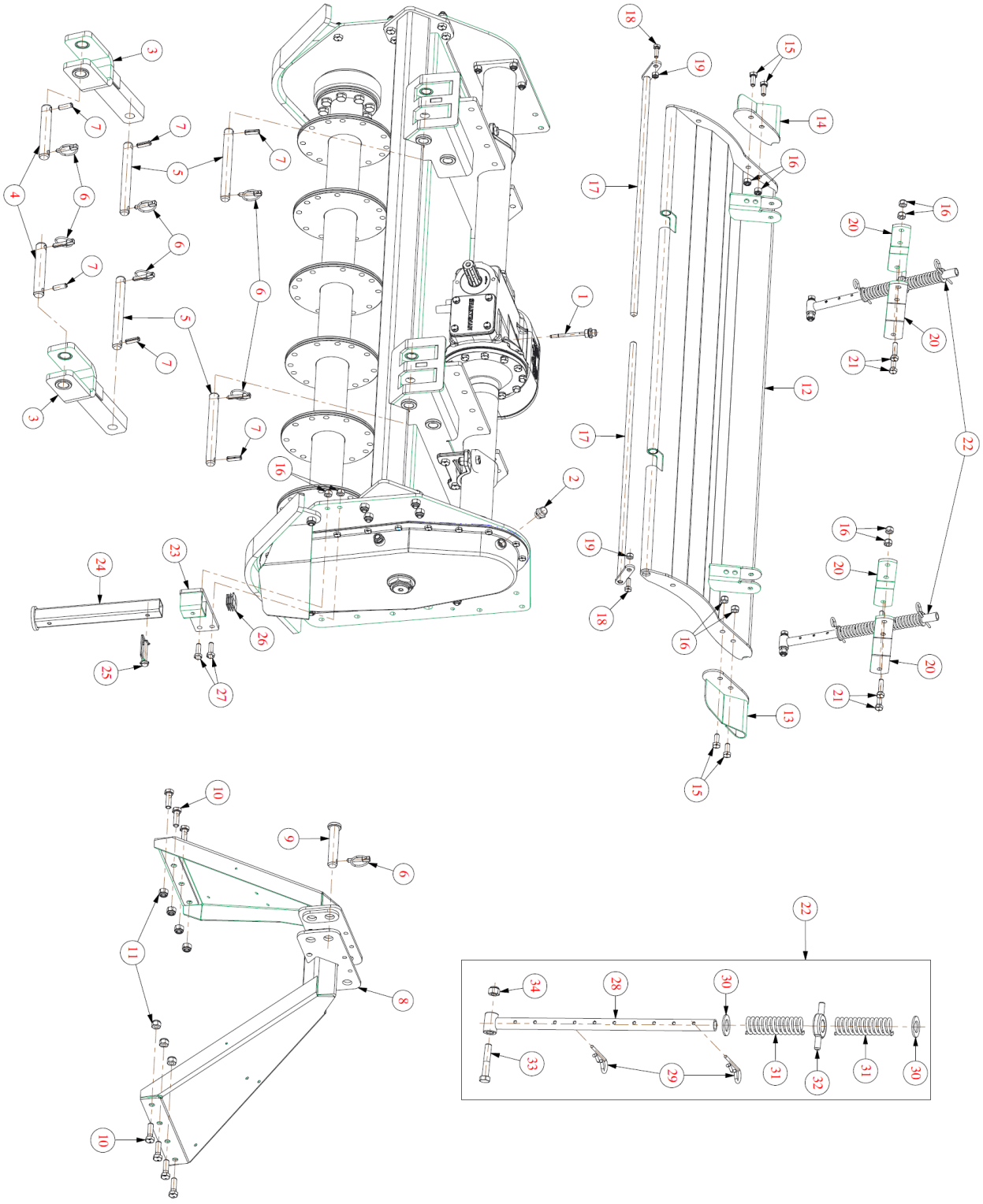

Accessories Parts			
SR NO	**MANUAL CODE**	**MATERIAL DESCRIPTION**	**QTY**
1	3330	DIPSTICK 87MM (1/2" BSP)	1
2	14310	AIR BREATHER 1/2" BSP (1GTSR38)	1
3	23083	CLEVIS, LOWER HITCH (CATEGORY II)(JUMBO)	2
4	23103	PIN,LOWER HITCH (CATEGORY II) (JUMBO)	2
5	23105	PIN,LOWER HITCH ATTACHMENT (JUMBO)	4
6	23062	LINCH PIN (D10XL45)	7
7	23067	SPRING PIN D12X40	6
8	3282	TOP MAST WELDMENT (VICTOR)	1
9	23104	PIN,TOP HITCH (CATEGORY II) (JUMBO)	1
10	3339	HEX BOLT M14 X 1.50 X 45 (8.8) DIN931	8
11	1302	NYLOCK NUT M14X1.50 (DIN-982)	8
12	3310	REAR BOARD 150 (VICTOR)	1
	3285	REAR BOARD 175 (VICTOR)	1
	3296	REAR BOARD 200 (VICTOR)	1
	3302	REAR BOARD 225 (VICTOR)	1
13	3286	EXTENSION REAR BOARD TR. SIDE (VICTOR)	1
14	3287	EXTENSION REAR BOARD EX. SIDE (VICTOR)	1
15	17275	HEX BOLT M12 X 1.75 X 30 (8.8) DIN931	4
16	1209	NYLOCK NUT M12X1.75 (DIN-982)	10
17	3311	ROD REAR BOARD WELDMENT 150 (VICTOR)	2
	3289	ROD REAR BOARD WELDMENT 175 (VICTOR)	2
	3297	ROD REAR BOARD WELDMENT 200 (VICTOR)	2
	3303	ROD REAR BOARD WELDMENT 225 (VICTOR)	2
18	3340	HEX BOLT M10 X 1.50 X 30 (8.8) DIN933	2
19	1298	NYLOCK NUT M10X1.50 (DIN-982)	2
20	3291	BRACKET SPRING ADJ. SUPPORT (VICTOR)	4
21	3338	HEX BOLT M12 X 1.75 X 45 (8.8) DIN933	4
22	2302	DAMPER SPRING ASSY (SEMI +)	2
23	4787	SIDE STAND OUTER COMPLETE (REG L) NEW	1
24	4788	SIDE STAND COMPLETE (REG L) NEW	1
25	2364	SNAPPER PIN (SQ.) D9.5 X L70	1
26	4657	SQ. PIPE PLASTIC CAP 40MM	1
27	17274	HEX BOLT M12 X 1.75 X 35 (8.8) DIN931	2
28	2303	DAMPER SPRING ROD COMP (SEMI +)	1
29	23068	R-CLIP D5 X L100 MM	2
30	2304	DAMPER SPRING WASHER (SEMI +)	2
31	2305	DAMPER SPRING (SEMI +)	2
32	2306	DAMPER SPRING COLLER (SEMI +)	1
33	2203	HEX BOLT M12 X 1.75 X 65	1
34	1209	NYLOCK NUT M12X1.75 (DIN-982)	1

MACHINE PARTS

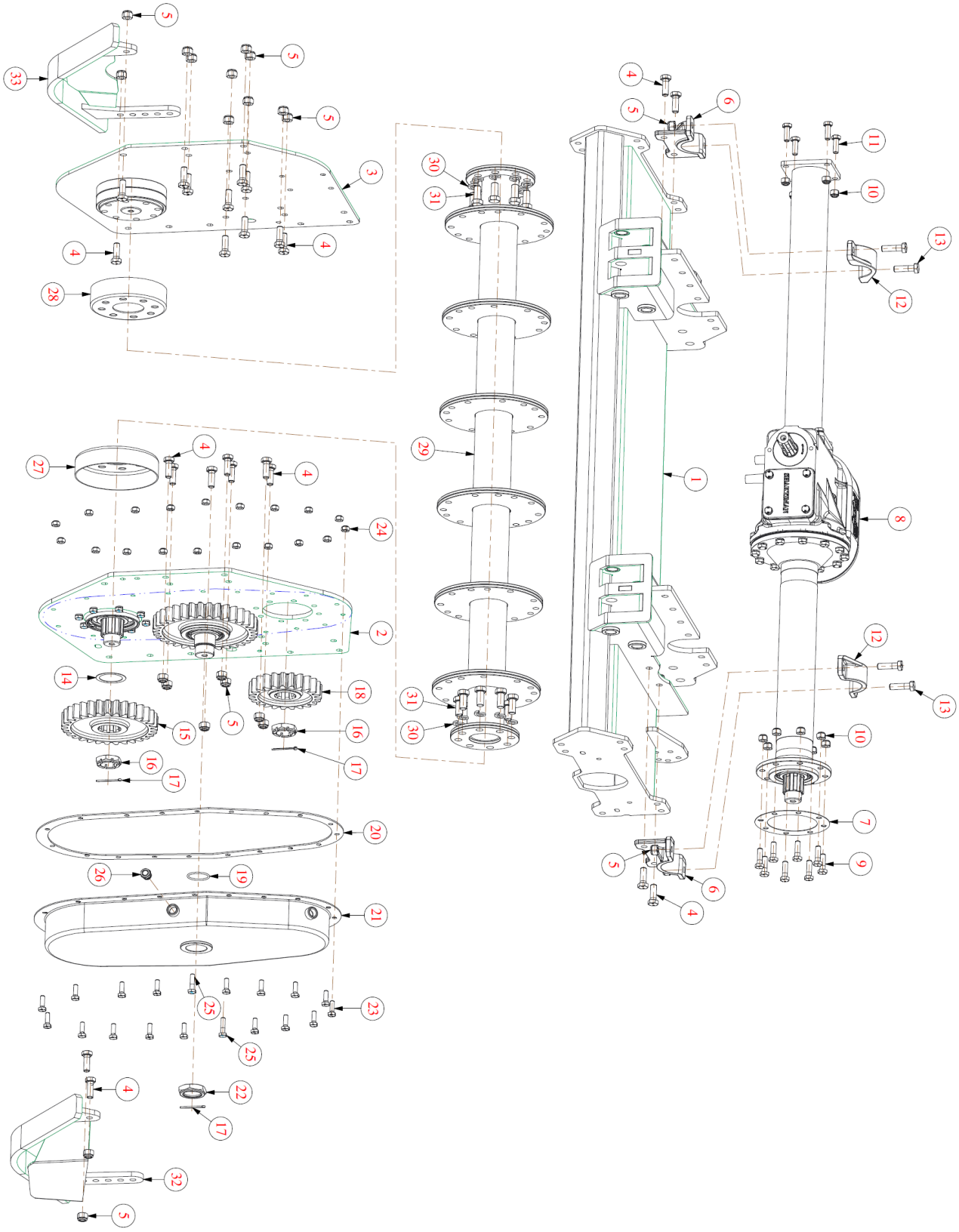

Machine Parts			
SR NO	**MANUAL CODE**	**MATERIAL DESCRIPTION**	**QTY**
1	3306	FRAME WELDMENT 150 (VICTOR)	1
	3268	FRAME WELDMENT 175 (VICTOR)	1
	3292	FRAME WELDMENT 200 (VICTOR)	1
	3298	FRAME WELDMENT 225 (VICTOR)	1
2	3411	TILLER END PLATE TR. SIDE ASM(VICTOR)SR	1
3	3273	TILLER END PLATE EX. SIDE ASM (VICTOR)	1
4	3341	HEX BOLT M14 X 1.50 X 40 (8.8) DIN933	24
5	1302	NYLOCK NUT M14X1.50 (DIN-982)	28
6	2232	JACK SHAFT HOUSING CLAMP BOTTOM (DIA 89)	2
7	2063	HOUSING FLANGE SMALL GASKET (CHA)	1
8	3307	GEAR BOX ASSY 150 (VICTOR)	1
	3275	GEAR BOX ASSY 175 (VICTOR)	1
	3293	GEAR BOX ASSY 200 (VICTOR)	1
	3299	GEAR BOX ASSY 225 (VICTOR)	1
9	17433	HEX BOLT M12 X 1.75 X 40(HT)(8.8) DIN931	8
10	1209	NYLOCK NUT M12X1.75 (DIN-982)	12
11	17274	HEX BOLT M12 X 1.75 X 35 (8.8) DIN933	4
12	2231	JACK SHAFT HOUSING CLAMP TOP (DIA 89)	2
13	23384	HEX BOLT M14 X 1.50 X 55 (8.8) DIN931	4
14	3348	SIMS (DIA 72 X 55)(1.00MM)	1
15	3406	GEAR 31 TEETH (CHA) (SPLINE ROLLING)	1
16	1093	CASTLE NUT 40MM	2
17	14137	COTTER PIN (DIA 4 X 70)	3
18	3019	GEAR 23 TEETH SIDE GEAR (CHA)	1
19	20351	'O'' RING ID-47.2 MM X W-3.5 MM-SCH	1
20	3006	CHAIN COVER GASKET (CHA)	1
21	3279	COVER WELDMENT GD SIDE (VICTOR)	1
22	23065	NYLOCK NUT M45 X 1.5	1
23	3340	HEX BOLT M10 X 1.50 X 30 (8.8) DIN933	17
24	1298	NYLOCK NUT M10X1.50 (DIN-982)	19
25	3342	HEX BOLT M10 X 1.50 X 40 (8.8) DIN931	2
26	23251	OIL LEVAL KNOB TYPE 1/2 BSP	1
27	1119	DUST COVER BIG	1
28	1087	DUST COVER SMALL	1
29	3309	ROTOR WELDMENT OUTWARD 150 (VICTOR)	1
	3281	ROTOR WELDMENT OUTWARD 175 (VICTOR)	1
	3295	ROTOR WELDMENT OUTWARD 200 (VICTOR)	1
	3301	ROTOR WELDMENT OUTWARD 225 (VICTOR)	1
30	1308	SPRING WASHER 16MM	16
31	1163	HEX BOLT M16 X 1.50 X 35 (FT)(10.9)	16
32	3283	SKID WELDMENT TR. SIDE (VICTOR)	1
33	3284	SKID WELDMENT EX. SIDE (VICTOR)	1

GEAR BOX PARTS (MULTI SPEED)

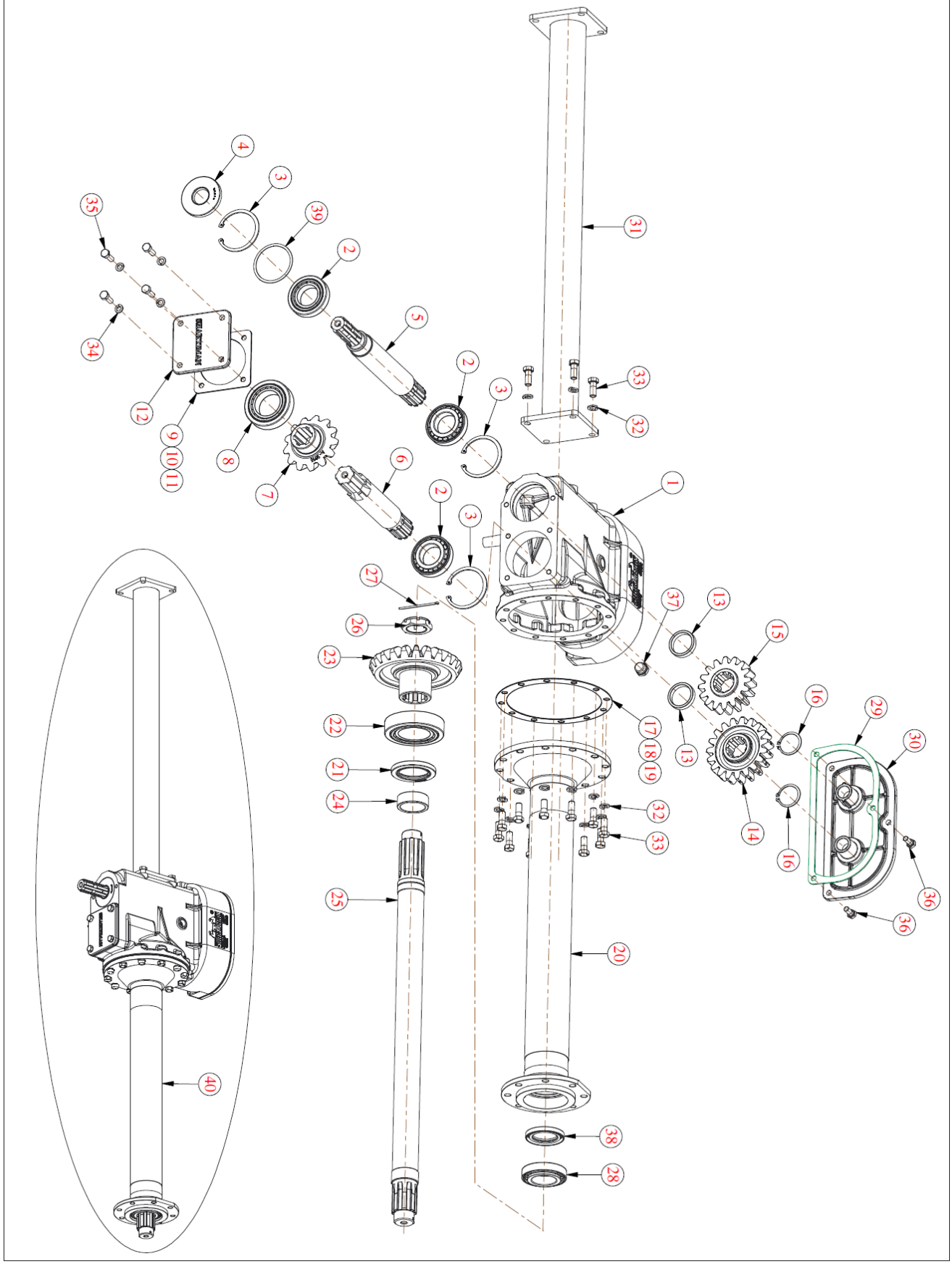

GEAR BOX PARTS (MULTI SPEED)			
SR NO	**MANUAL CODE**	**MATERIAL DESCRIPTION**	**QTY**
1	3332	GEAR BOX 1000 RPM (CHA) UPGRADED	1
2	1045	BEARING 30209	3
3	1049	CIRCLIP INTERNAL 85mm	3
4	1448	OIL SEAL 35 X 85 X 10	1
5	2043	INPUT SHAFT 1000 RPM(CHA)	1
6	2061	INTER. SHAFT (CHA)	1
7	2005	PINION 13 TEETH (CHA)	1
8	1030	BEARING 32211	1
9	2012	INTER. SHAFT PLATE GASKET (CHA)0.4 mm	1
10	2106	INTER. SHAFT PLATE GASKET (CHA)0.8 mm	1
11	2107	INTER. SHAFT PLATE GASKET (CHA)1.5 mm	1
12	3097	SHAKTIMAN BACK PLATE SMALL (CHA)NEW	1
13	2101	SPUR GEAR SPACER (CHA)	2
14	2051	GEAR 18 TEETH (CHA)	1
	2052	GEAR 19 TEETH (CHA)	1
15	2050	GEAR 17 TEETH (CHA)	1
	2049	GEAR 16 TEETH (CHA)	1
16	2089	CIRCLIP EXTERNAL 45MM	2
17	2018	HOUSING FLANGE BIG GASKET (CHA) 0.4MM	1
18	2104	HOUSING FLANGE BIG GASKET (CHA) 0.8MM	1
19	2105	HOUSING FLANGE BIG GASKET (CHA) 1.5MM	1
20	3388	J/S HSG. SRT-5 (EL-574MM) (CHA)	SRT-150 = 1
	3401	J/S HSG. (J-812) (EL-688MM) (VICTOR)	SRT-175 = 1
	3399	J/S HSG. (J-932) (EL-808MM) (VICTOR)	SRT-200 = 1
	3396	J/S HSG. (J-1057) (EL-933MM) (CHA)	SRT-225 = 1
21	2023	OIL SEAL 65 X 90 X 10	1
22	2024	BEARING 32213	1
23	2025	CROWN 23 TEETH (CHA)	1
24	3324	JACK SHAFT TAPER SLEEVE (CHA)	1
25	2020	JACK SHAFT (TL-697) SRT-5 (CHA)	SRT-150 = 1
	3335	JACK SHAFT (TL-811) (VICTOR)	SRT-175 = 1
	3276	JACK SHAFT (TL-931) (VICTOR)	SRT-200 = 1
	3142	JACK SHAFT (TL-1056) (CHA)	SRT-225 = 1
26	1093	CASTLE NUT 40mm	1
27	2100	COTTER PIN (DIA 4 X 76MM)	1
28	1013	BEARING 30210	1
29	2225	BACK PLATE 1000 RPM GASKET (CHA)UPGRADED	1
30	3267	BACK PLATE 1000 RPM (CHA) UPGRADED ALU.	1

GEAR BOX PARTS (MULTI SPEED)			
SR NO	**MANUAL CODE**	**MATERIAL DESCRIPTION**	**QTY**
31	3312	EXTENSION TUBE 704MM EX. SIDE (VICTOR)	SRT-150 = 1
	3304	EXTENSION TUBE 829MM EX. SIDE (VICTOR)	SRT-175 = 1
	3278	EXTENSION TUBE 949MM EX. SIDE (VICTOR)	SRT-200 = 1
	3305	EXTENSION TUBE 1064MM EX. SIDE (VICTOR)	SRT-225 = 1
32	1306	SPRING WASHER 12mm	16
33	17275	HEX BOLT M12 X 1.75 X 30 (8.8) DIN933	16
34	1304	SPRING WASHER 10mm	4
35	3340	HEX BOLT M10 X 1.50 X 30 (8.8) DIN933	4
36	17270	HEX BOLT M10 X 1.50 X 25 (8.8) DIN931	3
37	1596	1/2 BSP BOLT WITH O-RING	1
38	17262	OIL SEAL 55 X 75 X 8	1
39	1411	SIMS (DIA 85 X 75)(0.30MM)	1
	1412	SIMS (DIA 85 X 75)(0.50MM)	1
40	3307	GEAR BOX ASSY 150 (VICTOR)	1
	3275	GEAR BOX ASSY 175 (VICTOR)	1
	3293	GEAR BOX ASSY 200 (VICTOR)	1
	3299	GEAR BOX ASSY 225 (VICTOR)	1

SIDE DRIVE PARTS

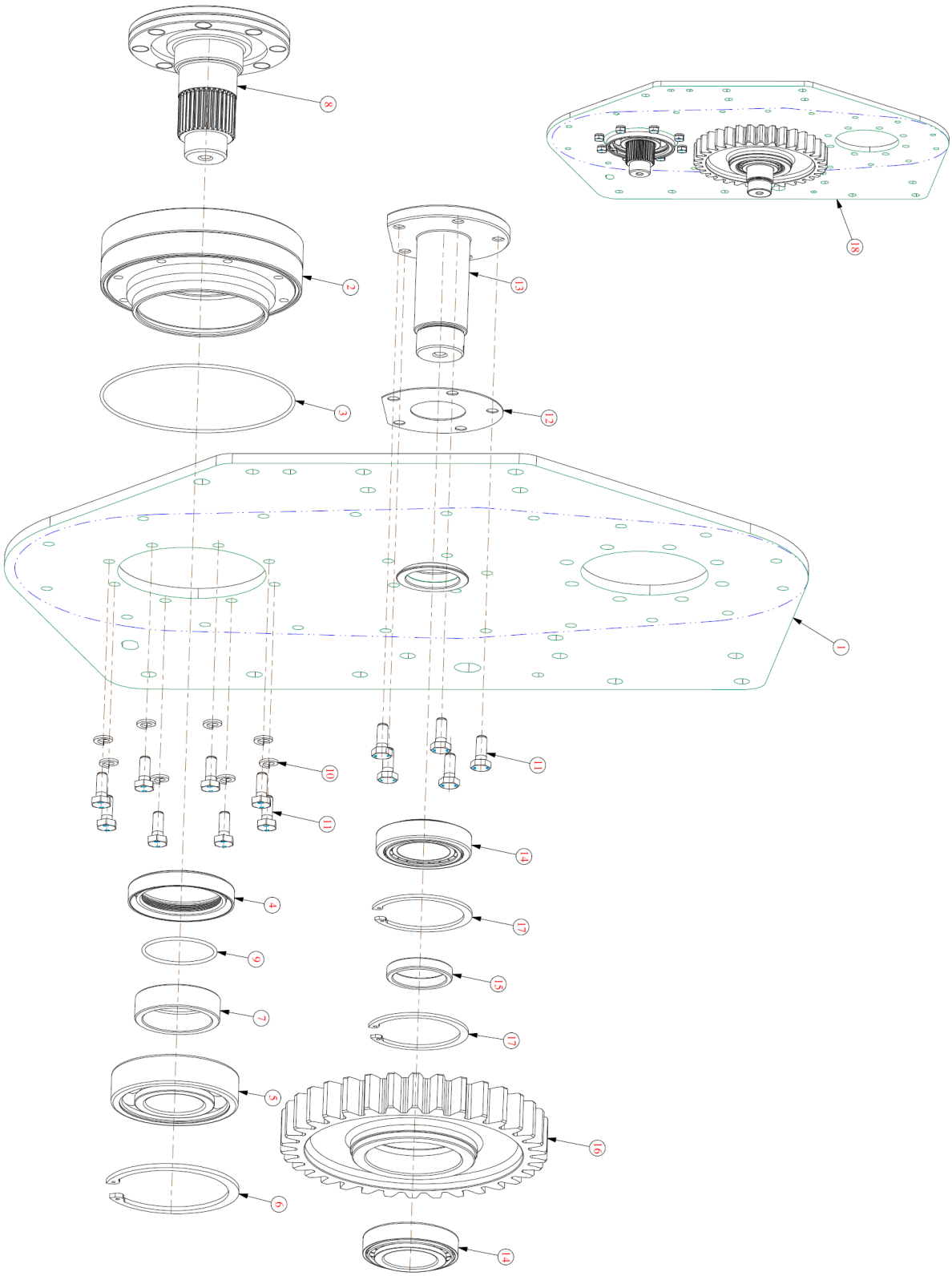

SIDE DRIVE PARTS			
SR NO	**MANUAL CODE**	**MATERIAL DESCRIPTION**	**QTY**
1	3272	TILLER END PLATE WELD GD SIDE (VICTOR)	1
2	1530	R D HOUSING (REG+)	1
3	4654	O RING 175 X 3 (VITON)	1
4	1101	MULTILIP OIL SEAL BIG-6311	1
5	1102	BEARING 6311 LU	1
6	1103	CIRCLIP INTERNAL 120MM	1
7	2318	R D SLEEVE GEAR (REG) NEW	1
8	4841	R D SHAFT (REG +) (SPLINE ROLLING)	1
9	1070	O RING 53 X 3	1
10	1304	SPRING WASHER 10MM	8
11	17270	HEX BOLT M10 X 1.50 X 25 (8.8) DIN931	13
12	3270	GASKET PIN IDLE GEAR (VICTOR)	1
13	3271	PIN IDLE GEAR (VICTOR)	1
14	1013	BEARING 30210	2
15	3026	MIDDLE SPACER 34 TEETH GEAR (CHA)	1
16	3020	GEAR 34 TEETH (CHA)	1
17	3027	CIRCLIP INTERNAL 90MM	2
18	3411	TILLER END PLATE TR. SIDE ASM(VICTOR)SR	1

STUB AXLE PARTS

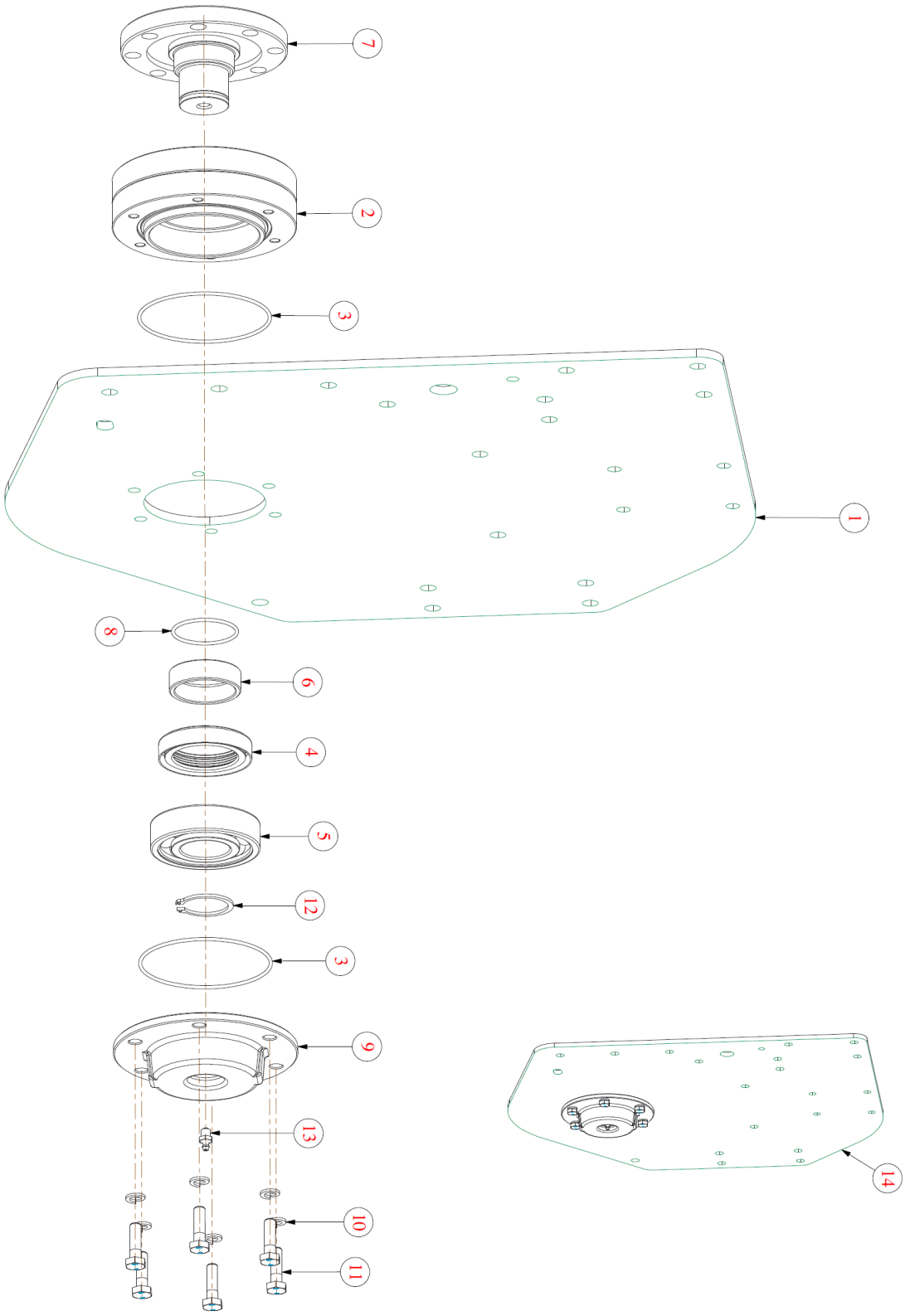

STUB AXLE PARTS			
SR NO	**MANUAL CODE**	**MATERIAL DESCRIPTION**	**QTY**
1	3274	TILLER END PLATE EX. SIDE (VICTOR)	1
2	1529	STUB AXLE HOUSING (REG+)	1
3	1323	O RING 115 X 3 (VITON)	2
4	1072	MULTILIP OIL SEAL-6309	1
5	1073	BEARING 6309 LU	1
6	1600	STUB AXLE SLEEVE (REG) NEW	1
7	4630	STUB AXLE (REG +)	1
8	1070	O RING 53 X 3	1
9	2331	STUB AXLE END COVER (NEW) (SEMI +)	1
10	1304	SPRING WASHER 10MM	6
11	3345	HEX BOLT M10 X 1.50 X 35 (8.8) DIN931	6
12	4711	CIRCLIP EXTERNAL 45MM (Heavy Duty)	1
13	1253	1/8 BSP GREASE NIPPLE 7.5MM	1
14	3273	TILLER END PLATE EX. SIDE ASM (VICTOR)	1

ROTOR PARTS

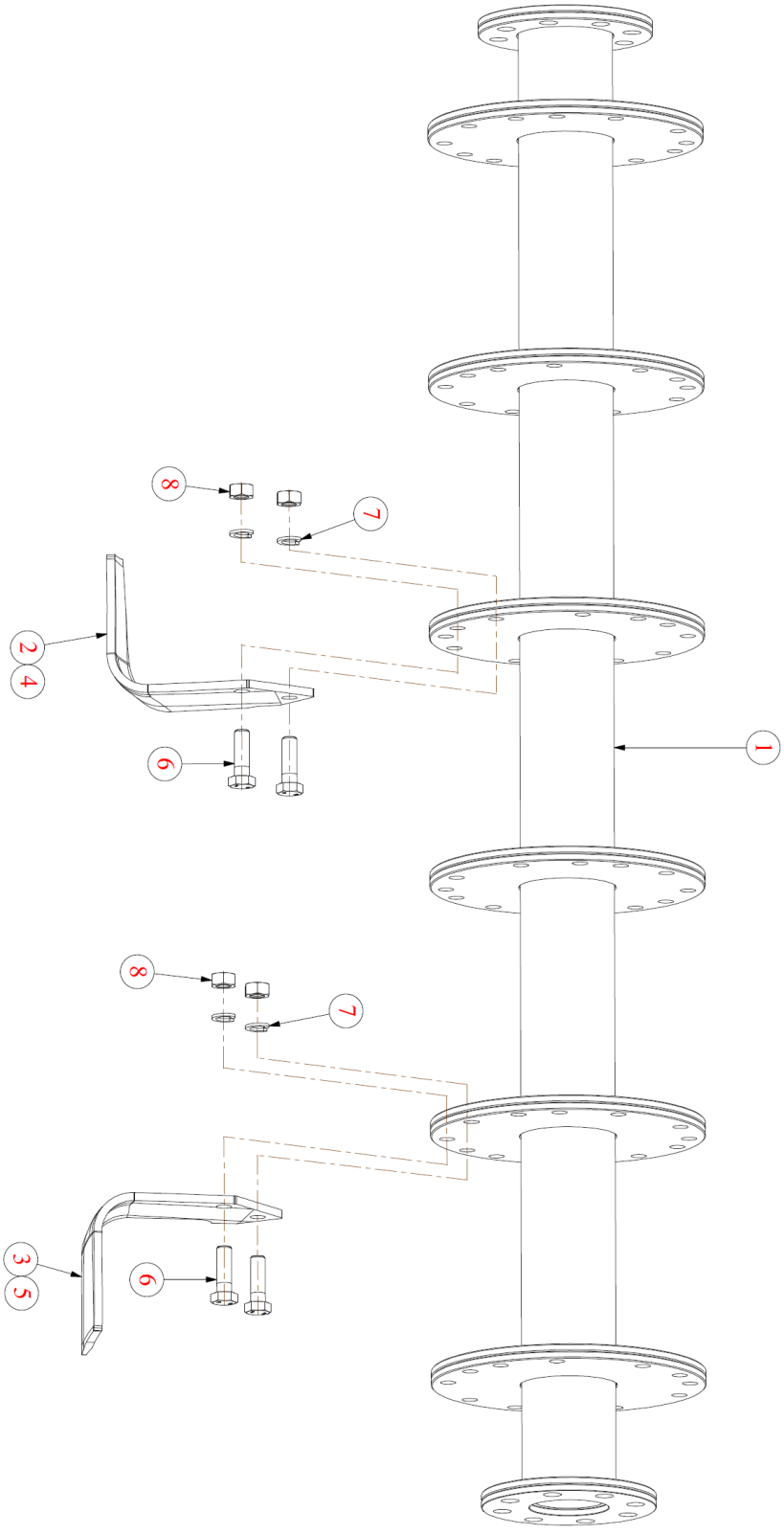

Rotor Parts			
SR NO	**MANUAL CODE**	**MATERIAL DESCRIPTION**	**QTY**
1	3309	ROTOR WELDMENT OUTWARD 150 (VICTOR)	1
	3281	ROTOR WELDMENT OUTWARD 175 (VICTOR)	1
	3295	ROTOR WELDMENT OUTWARD 200 (VICTOR)	1
	3301	ROTOR WELDMENT OUTWARD 225 (VICTOR)	1
2	23159	BLADE CURVED LH (90X8) (190X138)	AS REQ.
3	23160	BLADE CURVED RH (90X8) (190X138)	AS REQ.
4	1374	BLADE L- TYPE LH (CHA) INDIAN	AS REQ.
5	3029	BLADE L- TYPE RH (CHA) INDIAN	AS REQ.
6	23318	HEX BOLT M14 X 1.50 X 40 (8.8) DIN931	AS REQ.
7	1307	SPRING WASHER 14mm	AS REQ.
8	3347	HEX NUT M14 X 1.50 DIN 934	AS REQ.

CE KIT PARTS

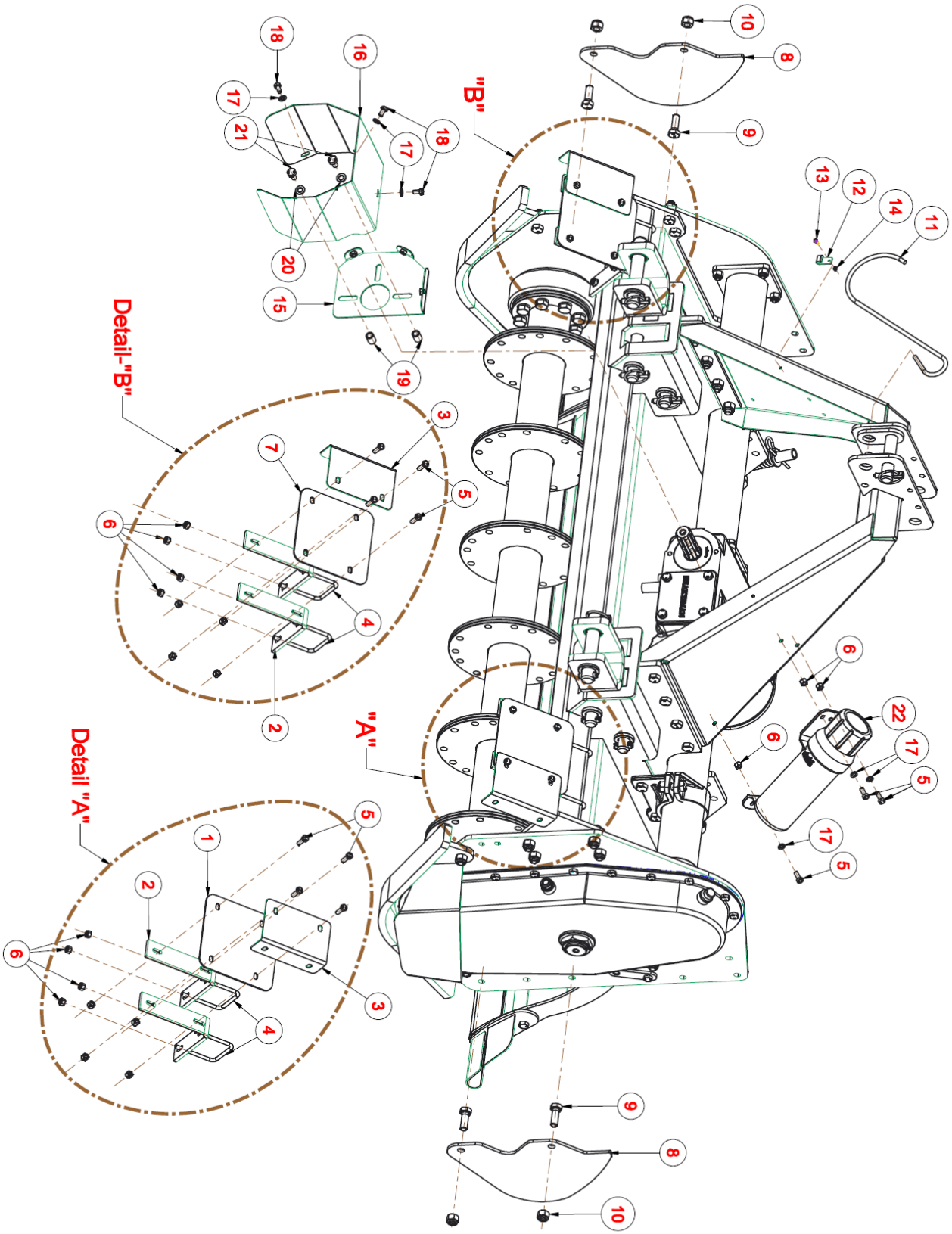

CE KIT PARTS			
SR NO	**MANUAL CODE**	**MATERIAL DESCRIPTION**	**QTY**
1	3337	PLATE END FRONT CE KIT 150 (VICTOR)	SRT-150/175 = 1
	23150	PLATE,FRONT BARRIER (L=330)(SRT-10)	SRT-200/225 = 1
2	23149	BRACKET,FRONT BARRIER (JUMBO)	4
3	3333	PLATE,END,FRONT BARRIER (VICTOR)	2
4	3260	SQ BEND U-BOLT M8X1.25X75X92X30TL	4
5	8171	HEX BOLT M8 X 1.25 X 25	11
6	1297	NYLOCK NUT M8X1.25 (DIN-982)	19
7	3337	PLATE END FRONT CE KIT 150 (VICTOR)	SRT-150/175 = 1
	23150	PLATE,FRONT BARRIER (L=330)(SRT-10)	SRT-200/225 = 1
8	3290	CE SIDE SHIELD (VICTOR)	2
9	3341	HEX BOLT M14 X 1.50 X 40 (8.8) DIN933	4
10	1302	NYLOCK NUT M14X1.50 (DIN-982)	4
11	23146	DRIVELINE HOOK 370MM	1
12	23147	PLATE,HOOK HOLDING (JUMBO)	1
13	23029	HEX BOLT M4 X 0.75 X 10	1
14	23028	HEX NUT M4 X 0.75	1
15	3322	BACK PLATE GUARD COMP (VICTOR)	1
16	3288	SHAFT GUARD (VICTOR)	1
17	8064	PLAIN WASHER 8MM	6
18	8190	HEX BOLT M8 X 1.25 X 15	3
19	1417	JOINT COVER MOUNTING BUSH	2
20	8078	PLAIN WASHER 10MM	2
21	17276	HEX BOLT M10 X 1.50 X 20(FT)(8.8) DIN933	2
22	26030	MANUAL BOX COVER 1/2(SMMSD)	1

NOTES:

Titan Implement

Email: Warranty@Titanimplement.com

PH:(423)334-0012